STATE	PROJECT NUMBER	SHEET NO.	TOTAL SHEETS
GA.	NHS-M000-00(863)	5	9

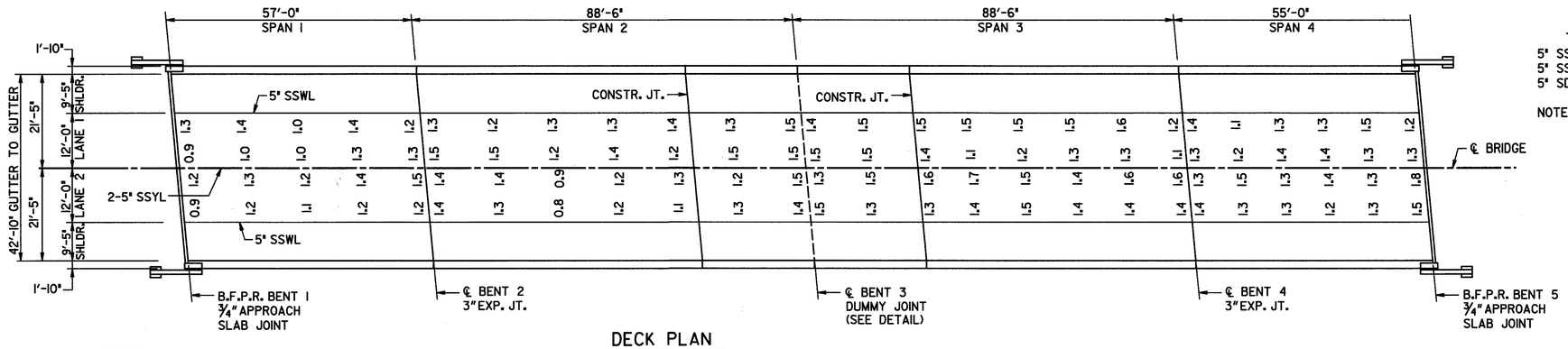

DECK PLAN

NOTES :
DECK STEEL CLEARANCES ARE BASED ON COVER METER READINGS TAKEN BY THE GA. D.O.T. AND ARE GIVEN FOR INFORMATION ONLY. CONTRACTOR SHALL PERFORM THE WORK BASED ON ACTUAL EXISTING STEEL CLEARANCES.

EXISTING CLEARANCES SHOWN ARE IN INCHES AND ARE AT THE APPROXIMATE LOCATION OF THE COVER METER READINGS.

PAVEMENT MARKING LEGEND

5" SSYL - 5" SINGLE SOLID YELLOW LINE
5" SSWL - 5" SINGLE SOLID WHITE LINE
5" SDWL - 5" SINGLE DASHED WHITE LINE

NOTE: TEMPORARY STRIPING SHALL BE USED DURING CONSTRUCTION. THERMOPLASTIC STRIPING SHALL BE DONE AFTER ALL DECK OVERLAY WORK IS COMPLETED. THE COST OF TEMPORARY STRIPING SHALL BE INCLUDED IN THE COST FOR TRAFFIC CONTROL.

CONSTRUCTION SEQUENCE

1. PLACE TEMPORARY TRAFFIC CONTROL MEASURES FOR PHASE I CONSTRUCTION.
2. SAWCUT AND REMOVE EXISTING DECK SLAB TO LIMITS SHOWN ON PLANS.
3. REMOVE EXISTING EDGE BEAMS.
4. CLEAN EXISTING DECK REINFORCEMENT TO REMAIN IN PLACE.
5. PLACE NEW EDGE BEAM REINFORCEMENT.
6. FORM AND CAST EDGE BEAM AND DECK SLAB CONCRETE.
7. REPEAT STEPS 1 THROUGH 6 FOR PHASE II CONSTRUCTION.
8. COMPLETE DECK OVERLAY AND JOINT SEALING OPERATIONS.

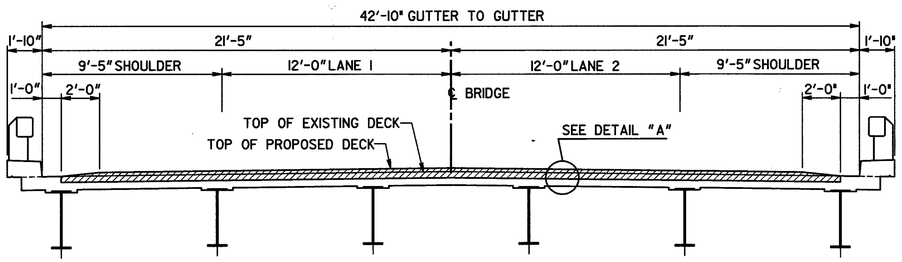

SECTION THRU SLAB

(LOOKING AHEAD)

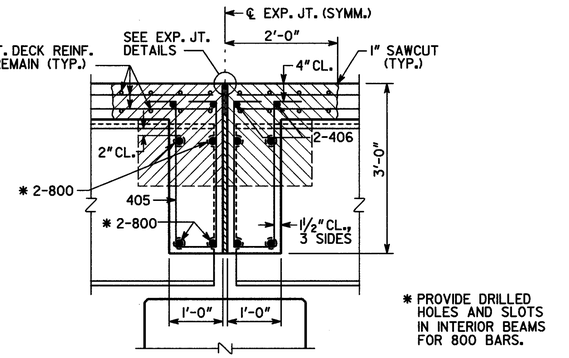

* PROVIDE DRILLED HOLES AND SLOTS IN INTERIOR BEAMS FOR 800 BARS.

DENOTES CONCRETE TO BE REMOVED

SECTION THRU EDGE BEAM

(BENTS 2 - 4)

- SEAL AS PER SPECIAL PROVISION SECTION 449. SEAL SHALL BE 2" (H) BY (W) WIDE PRIOR TO INSTALLATION.

EXP. JT.	(W)
¾"	1"
3"	3¾"

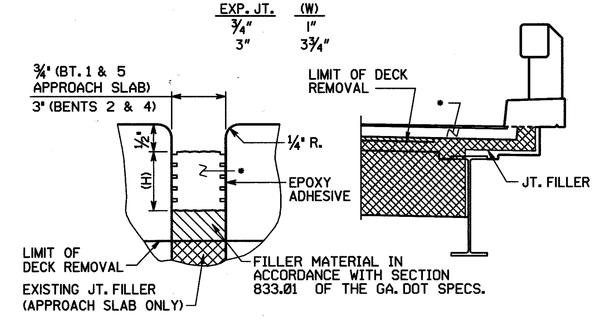

LONGITUDINAL SECTION TRANSVERSE SECTION

EXPANSION JOINT DETAILS

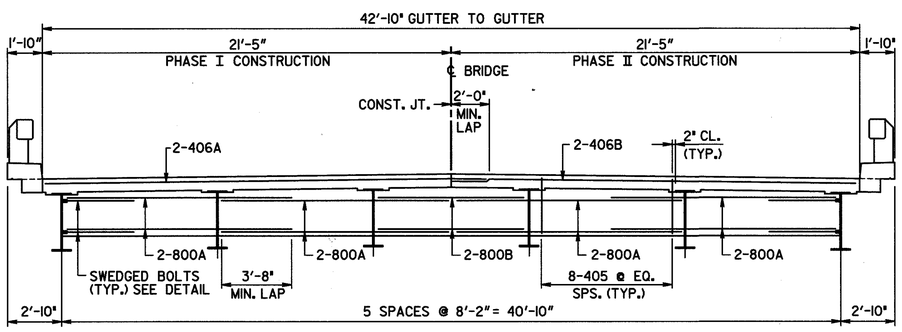

SECTION AT EDGE BEAM

NOTE: COST FOR SUPPLYING AND INSTALLING SLEEVE AND BOLT TO BE INCLUDED IN OVERALL BID PRICE SUBMITTED.

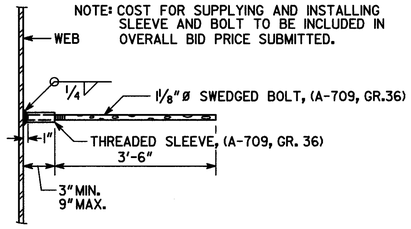

EDGE BEAM BAR LAP DETAIL

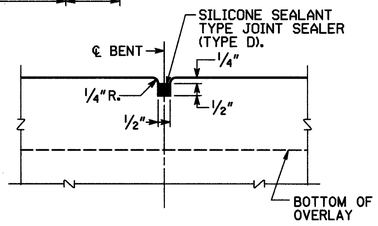

DUMMY JOINT DETAIL

NO SCALE

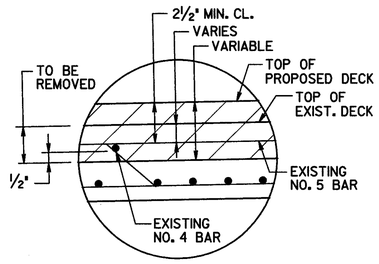

DETAIL "A"

LOCATION	NO. OF LOC.	MARK	LENGTH FT.	LENGTH IN.	NO. BARS REQ'D.	TYPE	A	G	B FT.	B IN.	C FT.	C IN.	D FT.	D IN.
BT 2 & 4	2													
		405	6	8	80	31	4	4	0	9	2	7	2	7
		408A	23	6	4	1								
		408B	21	2	4	1								
		800A	12	0	32	1								
		800B	7	10	8	1								

BRIDGE NO. 1

JBT J.B. Trimble, Inc.
6445 Powers Ferry Road
Atlanta GA 30339-2933
(770) 952-1022

GEORGIA
DEPARTMENT OF TRANSPORTATION
OPERATIONS DIVISION-OFFICE OF MAINTENANCE

DISTRICT 2 BRIDGE REPAIRS (DECK OVERLAY)
S.R. 77 OVER I-20

GREENE COUNTY NHS-M000-00 (863)

SCALE: AS SHOWN APRIL 2002

GEORGIA REGISTERED No. 16995 PROFESSIONAL ENGINEER SANFORD L. POWELL, JR.
05-24-02

BRIDGE SHEET 2 OF 2

DATE	REVISIONS	BY

DESIGNED MDT CHECKED GLE REVIEWED EHG
DRAWN ITD DESIGN GROUP MAINTENANCE APPROVED STH

C:\DGN\2019\CT9\B0L9-1DK.DGN 10-3-01 ITD