STATE	PROJECT NUMBER	SHEET NO.	TOTAL SHEETS
GA.	STP-M000-00(501)	90	98

DROP INLET TYPE V-1
(WITH HOOD)

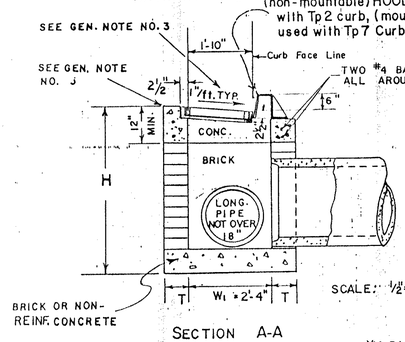

SCALE: ½" = 1 FT.

SECTION A-A

DROP INLET TYPE V-2:

REDUCER SLABS OR BRICK TAPER (bottom left) ARE FOR USE WITH LARGER PIPES. IN GENERAL THIS WILL BE CROSS DRAIN PIPES OVER 24", LONGITUDINAL PIPES OVER 18" (Type V-1) AND LONGITUDINAL PIPES OVER 15" (Type V-2).

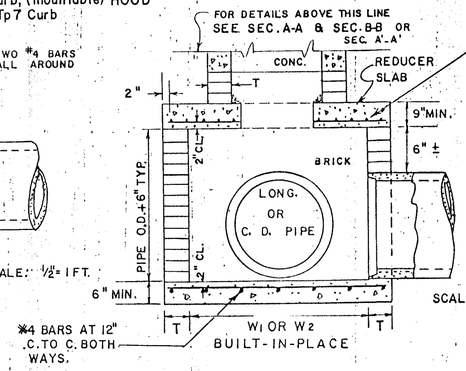

BUILT-IN-PLACE

SCALE: ½" = 1 FT.

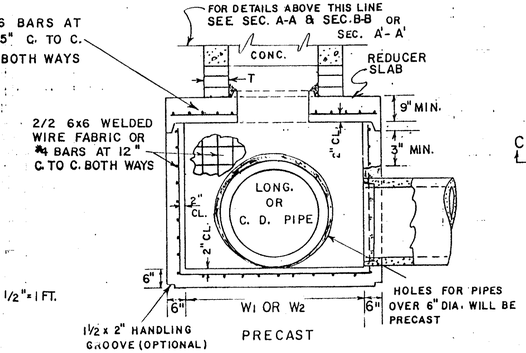

PRECAST

DETAIL OF REDUCING W1 OR W2 DIMENSIONS WITH REDUCER SLAB.

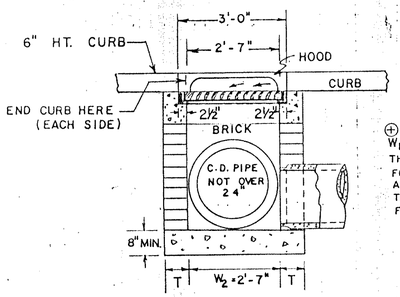

SECTION B-B

SCALE: ½" = 1 FT.

⊕ W1 x W2 NOT LESS THAN 2'-4" x 2'-7" FOR TYPE V-1 AND NOT LESS THAN 1'-8" x 2'-7" FOR TYPE V-2

MINIMUM W1, W2 AND H DIMENSIONS			
PIPE SIZE	W1 (MIN.) OR W2 (MIN.) BRICK	W1 (MIN.) OR W2 (MIN.) REINF. CONC.	H (MIN.)
15"	⊕ 1'-8"	⊕ 1'-8"	3'-10"
18"	⊕ 2'-0"	⊕ 2'-0"	4'-2"
24"	2'-7"	2'-7"	4'-9"
30"	3'-4"	3'-6"	5'-10"
36"	3'-10"	4'-0"	6'-5"
42"	4'-5"	4'-6"	7'-0"
48"	5'-0"	5'-0"	7'-10"
54"	5'-7"	5'-6"	8'-5"
60"	6'-2"	6'-0"	9'-0"

NOTE:
THE MINIMUM H DIMENSIONS SHOWN ARE BASED ON TYPICAL OUTSIDE DIAMETERS OF PIPES AND MAY BE MODIFIED WHERE THE ENGINEER OR DESIGNER DETERMINES THAT CONDITIONS PERMIT.
IT IS NOT NECESSARY THAT THE BOX TYPE BASE BE SQUARE. W1 AND W2 DIMENSIONS WILL VARY ACCORDING TO PIPE SIZE.

BRICK WALL THICKNESS	
H	T (MIN.)
TO 10'	8"
10' TO 20'	12"
20' TO 30'	16"

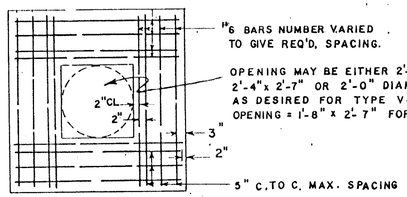

PLAN OF REINFORCING IN REDUCER SLAB

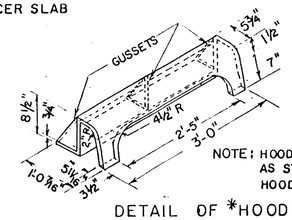

NOTE: HOOD IS SAME AS STD. 1019A HOOD.

DETAIL OF *HOOD (non-mountable)
(use with Tp2 Curb)

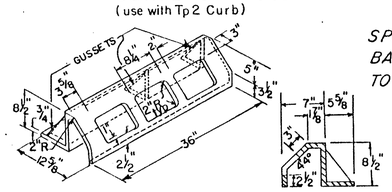

DETAIL OF *HOOD (mountable)
(use with Tp7 Curb)

*CONTRACTOR SHALL SPECIFY EITHER MOUNTABLE OR NON-MOUNTABLE TO FOUNDRY IF HOOD IS REQUIRED.

GRATE AND FRAME DETAILS

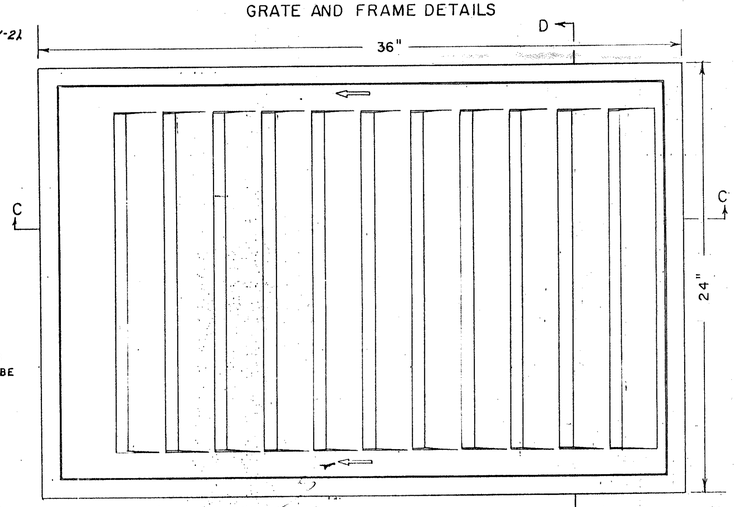

PLAN VIEW

SCALE: ¼" = 1"

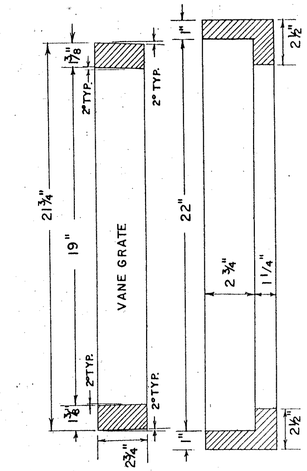

SECTION D-D

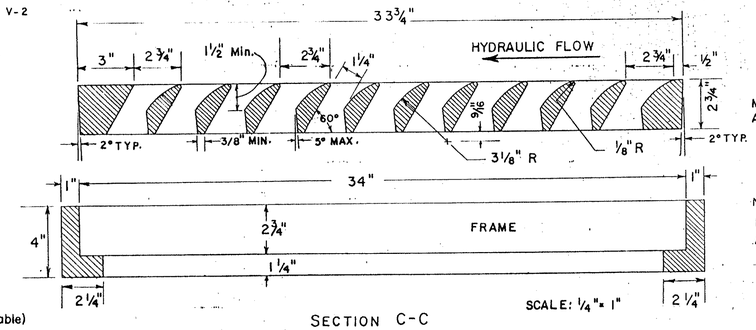

SCALE: ¼" = 1"

SECTION C-C

MATERIAL FOR GRATE: GRAY IRON, A.S.T.M. A-48 CLASS 30.

NOTE:
FRAME IS SAME AS GA. STD. 1010 OR CITY OF ATLANTA FRAME TYPE B.

SPECIAL NOTE:
BARS OF GRATE WILL BE PERPENDICULAR TO DIRECTION OF TRAFFIC FLOW.

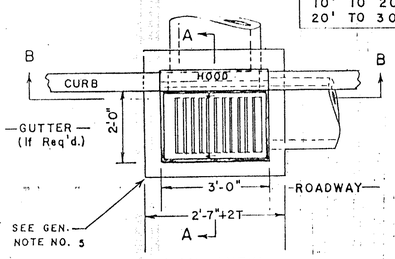

PLAN VIEW

SCALE: ½" = 1 FT.

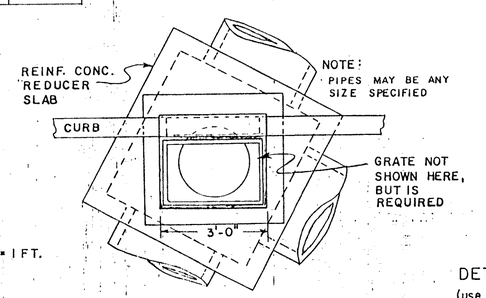

TYPICAL PLAN VIEW WITH SKEWED PIPES

DROP INLET TYPE V-2
(WITHOUT HOOD)

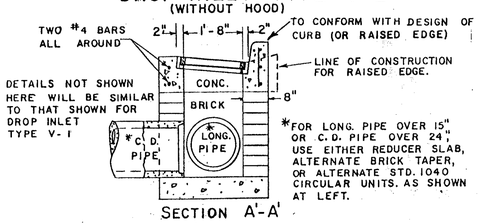

DETAILS NOT SHOWN HERE WILL BE SIMILAR TO THAT SHOWN FOR DROP INLET TYPE V-1

*FOR LONG. PIPE OVER 15" OR C.D. PIPE OVER 24", USE EITHER REDUCER SLAB, ALTERNATE BRICK TAPER, OR ALTERNATE STD. 1040 CIRCULAR UNITS. AS SHOWN AT LEFT.

SECTION A'-A'

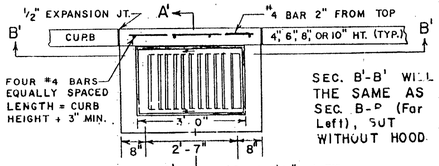

SEC. B'-B' WILL BE THE SAME AS SEC. B-B (For Left), BUT WITHOUT HOOD.

SCALE: ½" = 1 FT.

PLAN VIEW

GENERAL NOTES:

1. SPECIFICATIONS: GEORGIA STANDARD AND/OR SPECIAL PROVISIONS EXCEPT THAT VANE GRATE WILL BE GRAY IRON A.S.T.M. A-48 CLASS 30.
2. ALIGNMENT, NUMBER AND SIZES OF PIPES SHOWN ARE ONLY TYPICAL. SEE PLANS FOR ACTUAL PIPE CULVERT REQUIREMENTS.
3. SLOPE OF GRATE WILL MATCH GUTTER SLOPE WHEN USED WITH CURB AND GUTTER. SLOPE OF GRATE WILL MATCH ROADWAY SLOPE, WHERE THERE IS NO GUTTER (I.E., HEADER CURB, INTEGRAL CURB, ETC.). TOP OF HOOD WILL BE FLUSH WITH TOP OF CURB FOR TYPE V-1.
4. CONCRETE WILL BE CLASS "A" CONCRETE.
5. ½" EXPANSION JOINTS WILL BE REQUIRED IF RIGID PAVEMENT, SIDEWALK OR CONCRETE GUTTER MEETS DROP INLETS.
6. ALL STRUCTURES OVER 4ft. DEEP SHALL REQUIRED STEPS OF A TYPE APPROVED BY THE MATERIALS LABORATORY OR 3/4" Ø BARS STEPS AS SHOWN FOR OTHER INLET TYPES. NUMBER AND LOCATION OF STEPS SHALL BE AS DIRECTED BY THE ENGINEER.

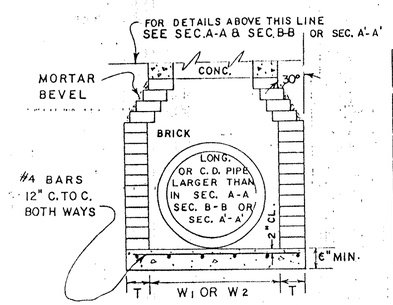

ALTERNATE - REDUCTION OF W1 OR W2 DIMENSIONS WITH BRICK MASONRY

SCALE: ½" = 1 FT.

MINIMUM H DIMENSIONS (FOR DETAIL AT LEFT)	
PIPE SIZE	H (MIN)
18"	4'-2"
24"	4'-9"
30"	5'-9"
36"	6'-9"
42"	7'-10"
48"	8'-11"
54"	10'-0"
60"	11'-2"

"E" = 8" FOR DROP INLET TYPE V-1
"E" = 1'-0" FOR DROP INLET TYPE V-2

SEE STANDARD 1040 FOR ADDITIONAL DETAILS

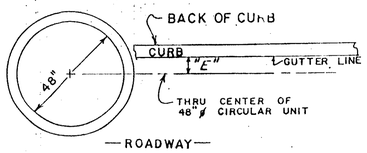

NOTE: STD. 1040 ALTERNATE PERMITTED WITH ANY PIPE SIZE OR SKEW.

ALTERNATE - STANDARD 1040 CIRCULAR SECTIONS - PLAN VIEW LOCATION.

SCALE: ⅓" = 1 FT.

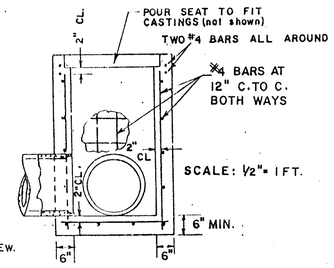

SCALE: ½" = 1 FT.

ALTERNATE - CAST-IN-PLACE REINFORCED CONCRETE

RMU	ADD MOUNTABLE HOOD	4-8-87

DEPARTMENT OF TRANSPORTATION
STATE OF GEORGIA

STANDARD
DROP INLET TYPES
V-1 AND V-2

SCALE AS SHOWN — AUGUST, 1979

DES. R.M.U.
DRW. R.M.U.
TRA. G.M.E.
CHK. R.K.C.

(SUBMITTED) H. S. Hardy
STATE ROAD & AIRPORT DESIGN ENG.
(APPROVED) D. Morton
STATE HIGHWAY ENGINEER

NUMBER 1019B

FORM EF3