STATE	PROJECT NUMBER	SHEET NO.	TOTAL SHEETS
GA.	STP.M000-00(501)	89	98

DIMENSIONS				QUANTITIES ONE CATCH BASIN					DIMENSIONS SKEW CONNECTIONS	
INSIDE D OF PIPE	90° W_1	NORMAL W_2	NORM. H. $W_2+10"$	CU. YDS. CL. A CONC. NORMAL H	CU. YDS. CL. A CONC. FOR EACH 1' ADD H.	LBS. REINF. STEEL NORMAL H	LBS. REINF. STEEL FOR EACH 1' ADD H.	C.I. GRATE	W_1 30°	W_1 45°
15"	2'-8"	4'-0"	4'-10"	1.696	.315	132	18	1		
18"	2'-8"	4'-3"	5'-1"	1.706	.315	135	18	1		
24"	2'-8"	4'-9"	5'-7"	1.779	.315	153	18	1	3'-1"	3'-10"
30"	3'-4"	5'-3"	6'-1"	2.351	.339	174	19	1	3'-10"	4'-9"
36"	4'-0"	5'-9"	6'-7"	2.568	.366	179	20	1	4'-8"	5'-8"

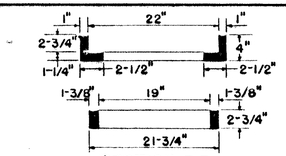

SECTION B B

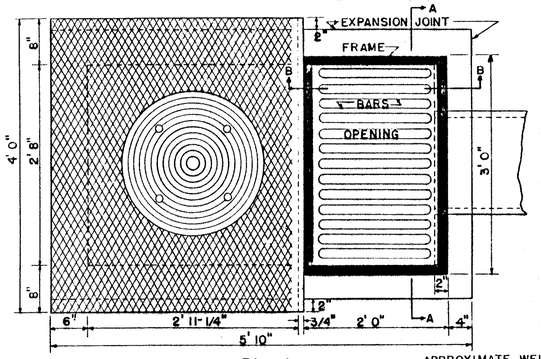

PLAN

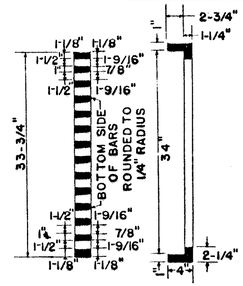

SECTION A-A

NOTE: CASTINGS ARE CITY OF ATLANTA STD. AND MODIFICATION AS SHOWN FOR SECTION OF FRAME AND COVER.

APPROXIMATE WEIGHT OF FRAME & COVER 480 POUNDS.
APPROXIMATE WEIGHT OF FRAME & GRATE 445 POUNDS.

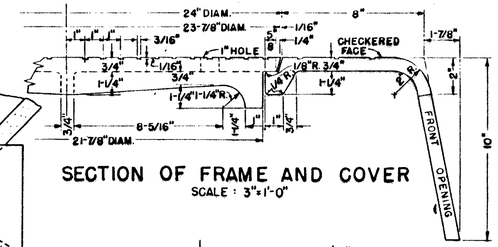

SECTION OF FRAME AND COVER
SCALE : 3"=1'-0"

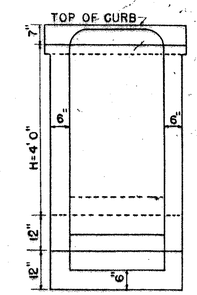

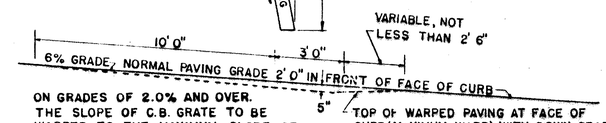

ON GRADES OF 2.0% AND OVER. THE SLOPE OF C.B. GRATE TO BE WARPED TO THE MAXIMUM SLOPE OF 5" IN 2'-0" AND THE TRANSITION OF THE WARPED PAVING AT FACE OF CURB TO BE SHORTENED TO NOT LESS THAN 2'-6" IN PLACE OF NORMAL 10' 0" TRANSITION ON DOWN GRADE SIDE OF C.B.

TOP OF WARPED PAVING AT FACE OF GURB (MAXIMUM WARP) WITH DOWN GRADE TRANSITION SHORTENED TO RETARD WATER FLOW.

LONGITUDINAL SECTION SHOWING WARPING OF PAVING TO FIT WARPED SLOPE OF C.B. GRATE ON GRADES OF 2.0% AND OVER- FULL WIDTH PAVING WITH INTERGRAL CURB (NO GUTTER).
SCALE - 1"=3' 0"

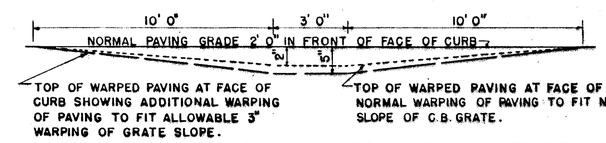

TOP OF WARPED PAVING AT FACE OF CURB SHOWING ADDITIONAL WARPING OF PAVING TO FIT ALLOWABLE 3" WARPING OF GRATE SLOPE.

TOP OF WARPED PAVING AT FACE OF CURB. NORMAL WARPING OF PAVING TO FIT NORMAL SLOPE OF C.B. GRATE.

LONGITUDINAL SECTION SHOWING WARPING OF PAVING TO FIT SLOPE OF GRATING WHERE PAVING IS FULL WIDTH WITH INTERGRAL CURB (NO GUTTER).

SCALE — HOR. 1"=3' 0" VERT. 1"=1' 0"

NOTE
WEEP HOLES MAY BE EITHER 4" DIA. ROUND OR 4" SQUARE.
AGGREGATE FOR BACKFILL AT WEEPHOLES SHALL CONSIST OF A MIXTURE OF 50% SIZE 57, M-58, 357 OR 467 COARSE AGGREGATE AND 50% SIZE 10 SAND, AND SHALL BE PLACED IMMEDIATELY PRIOR TO COMPACTING BASE MATERIAL.

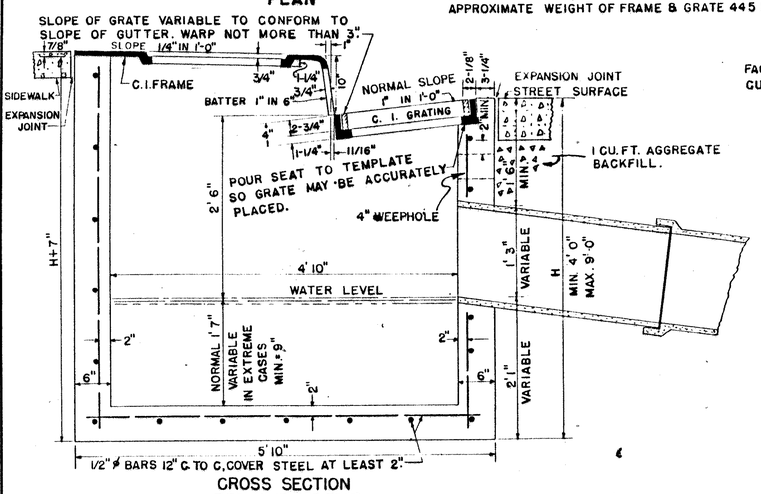

CROSS SECTION
TYPE-A (WITHOUT TRAP)

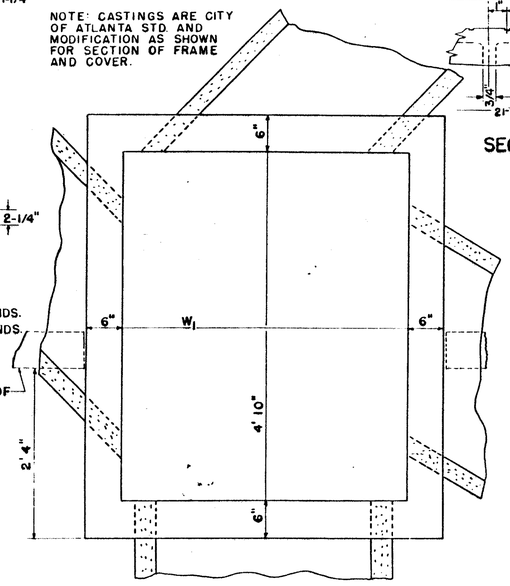

SKEW PIPE CONNECTIONS

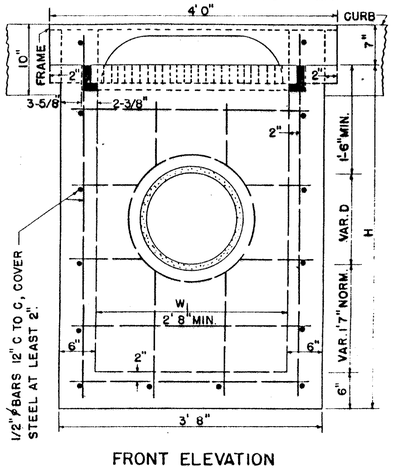

FRONT ELEVATION

NOTE: QUANTITIES SHOWN ARE APPROXIMATE FOR MINIMUM W_1 WITH ONE INLET AND ONE OUTLET CROSS DRAIN PIPE CONNECTION W_1 DIMENSIONS FOR SKEWED CONNECTIONS TO CATCH BASIN ARE VARIABLE ACCORDING TO SKEWED INLET OR OUTLETS USED.

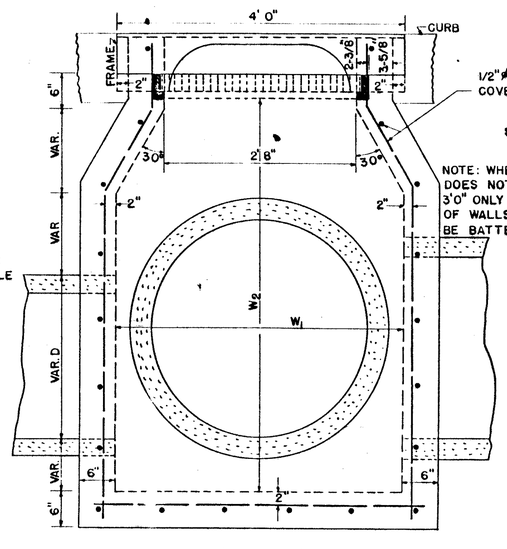

1/2" ø BARS 12" C. TO C. COVER STEEL AT LEAST 2".

NOTE: WHERE W_1 DOES NOT EXCEED 3'0" ONLY INSIDE FACE OF WALLS ARE TO BE BATTERED.

DETAIL OF WALLS W_1 EXCEEDS 2' 8"

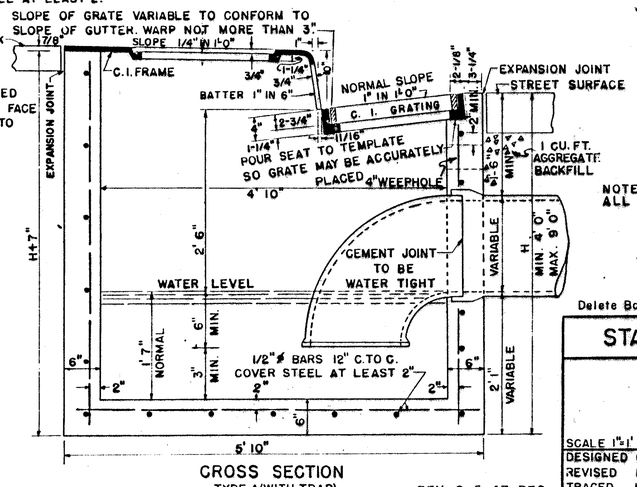

CROSS SECTION
TYPE-A (WITH TRAP)

NOTE: ALL TRAPS WILL BE OMITTED UNLESS SHOWN ON PLANS.

Delete Basis of Payment: A.V.S., 2-66

REV. 6, 5, 47 R.E.S.
REV. 12-8-1947 R.C.T.
REV. 12-18-1952 - J.R.S.
REV. 5-27-1955 - R.C.K.

REINF. CONC. CATCH BASIN WITH HOOD-TYPE-A

WITH & WITHOUT TRAP

STATE HIGHWAY BOARD OF GEORGIA

CATCH BASINS

SCALE 1"=1' 0"

DESIGNED	O.R.P.	8-18
REVISED	H.L.F.	3-36
TRACED	H.L.F.	3-36
REVISED	L.H.L.	4-37
REVISED	J.W.M.	1-11-38
REVISED	P.B.A.	4-6-39
REVISED	W.A.J.	10-25-39
TRACED	R.E.S.	10-24-46
CHECKED		

APPROVED M. E. Cox
STATE HIGHWAY ENGINEER

NO 1013