STATE	PROJECT NUMBER	SHEET NO.	TOTAL SHEETS
GA.	STP-M000-00(501)	4	98

REV 3-4-02

SECTIONS & DETAILS

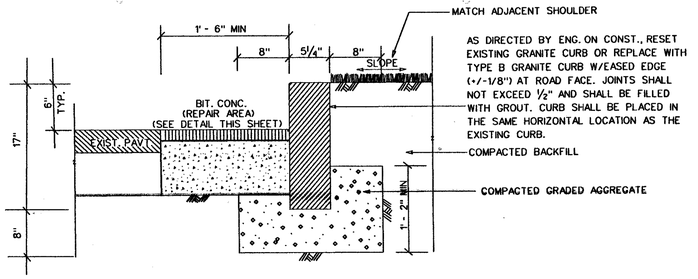

TYPICAL SECTION
NTS

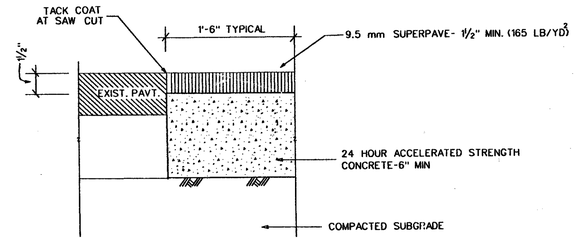

BITUMINOUS ROAD REPAIR-DETAIL
NTS

NOTE: SAW CUTTING OF PCC PAVEMENT WILL NOT BE PAID FOR SEPARATELY

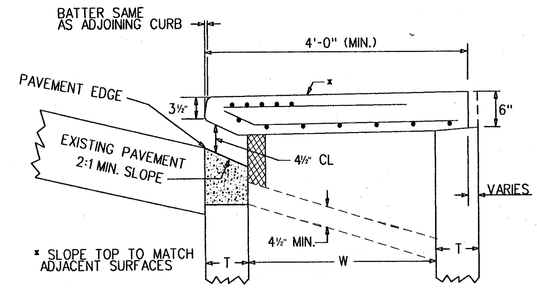

C-10 CATCH BASIN WITH GUTTER MODIFICATION
NTS

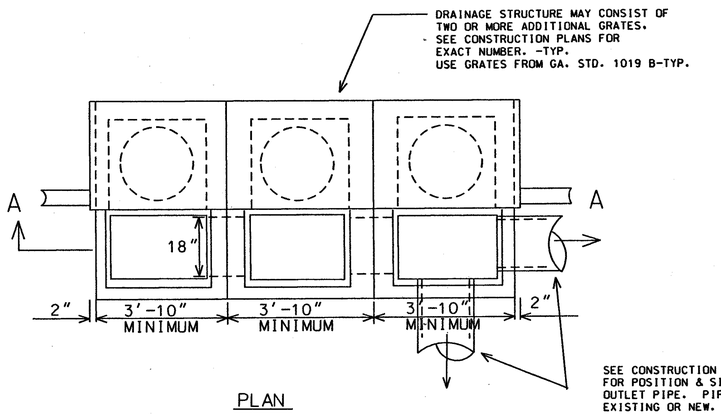

PLAN

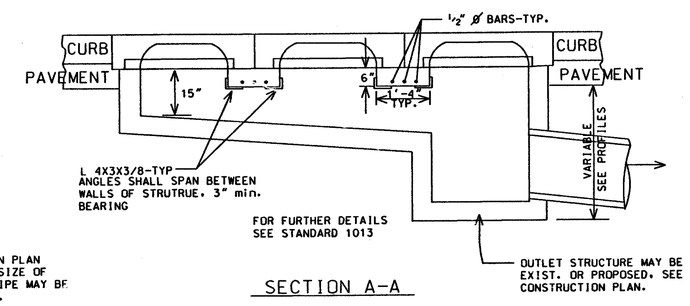

SECTION A-A

DETAIL OF CATCH BASIN
MODIFIED FOR MULTIPLE GRATES
NTS

A-1,4,6,7,9 B-1,4,5,7,9 C-6,6A,7,8

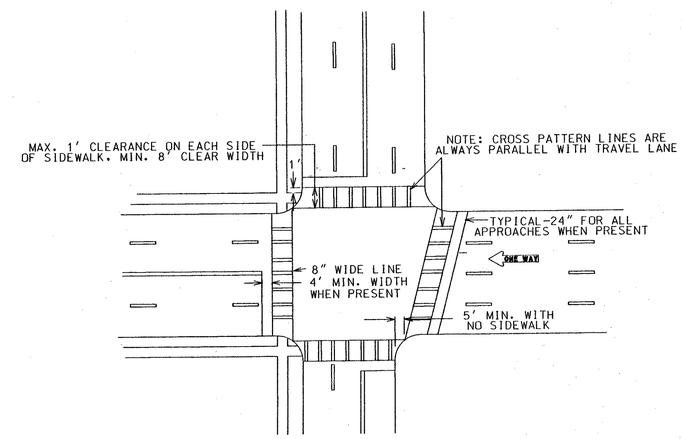

TYPICAL LOCATION OF CROSSWALKS AND STOP BARS

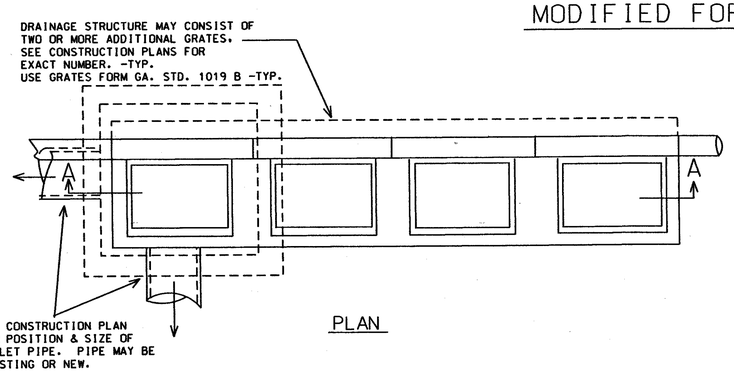

PLAN

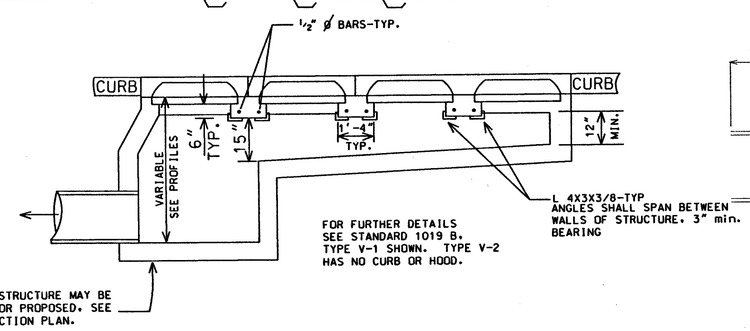

SECTION A-A

DETAIL OF DROP INLET
MODIFIED FOR MULTIPLE GRATES
NTS

A-4A & B. 6C & B. 7B B-2. 7A C-9B & D C-10D & F

NOTE: STRUCTURES A-4B.B-2.& C-9D ARE TYPE V-2.

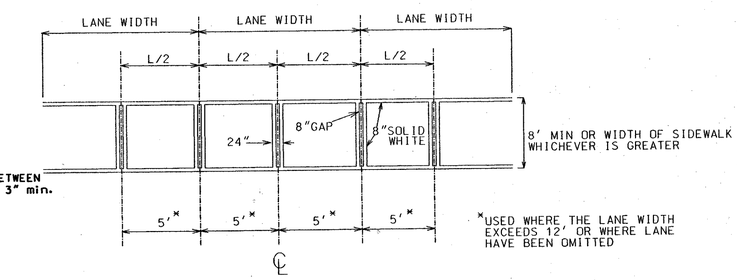

CROSSWALK DETAIL

GEORGIA
DEPARTMENT OF TRANSPORTATION
TYPICAL SECTIONS & DETAIL
PROJECT
COUNTY
DATE SH OF