STATE	PROJECT NUMBER	SHEET NO.	TOTAL SHEETS
GA.	NHS-M000-00(458)	40	80

TYPE 5, 6, & 7 POSTS

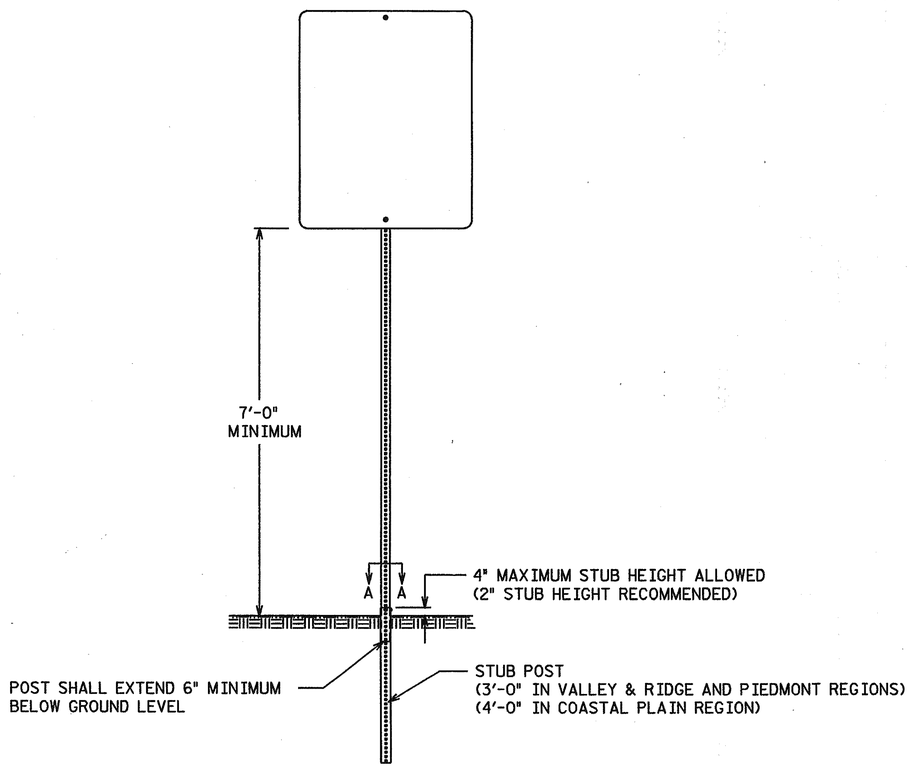

FRONT VIEW

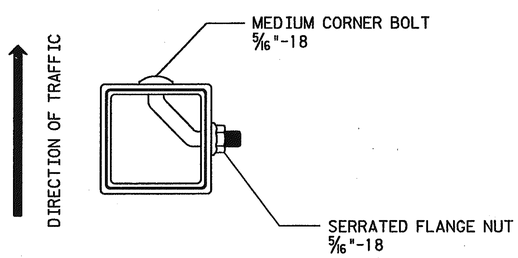

SECTION A-A

POST	STUB SIZE
TYPE 5	1½" x 1½"
TYPE 6	2" x 2"
TYPE 7	2½" x 2½"

TYPE 8 POSTS

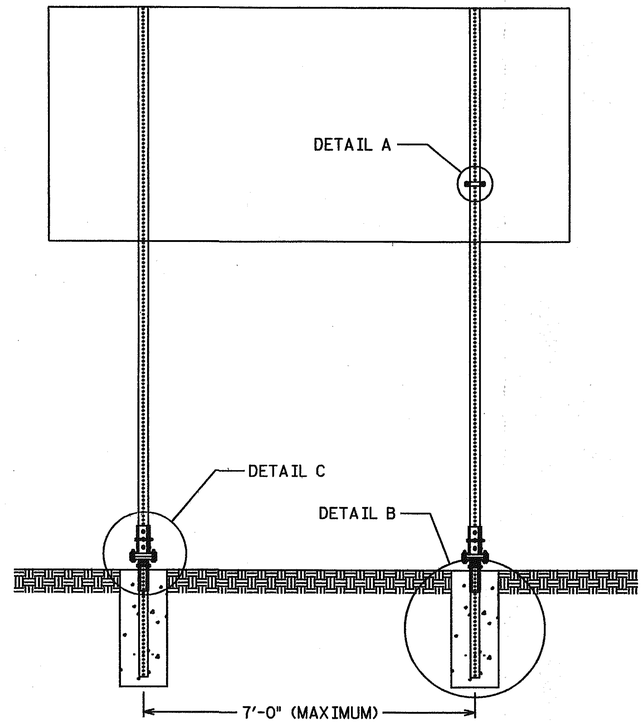

BACK VIEW

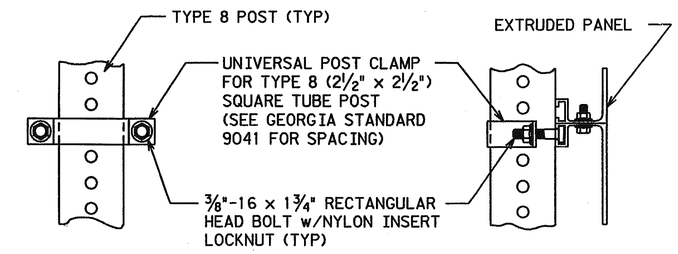

BACK VIEW SIDE VIEW

DETAIL A

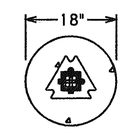

TOP VIEW

TOP VIEW

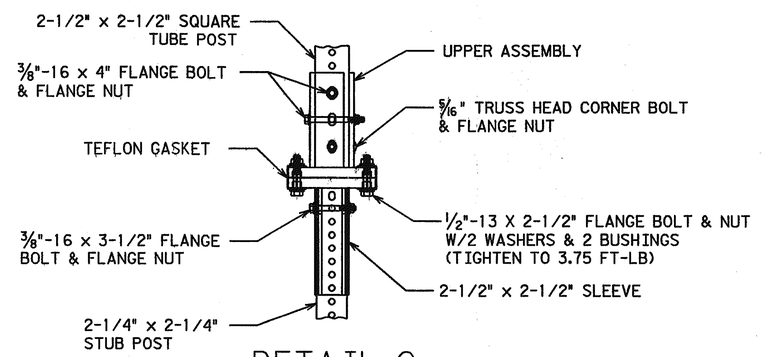

DETAIL C

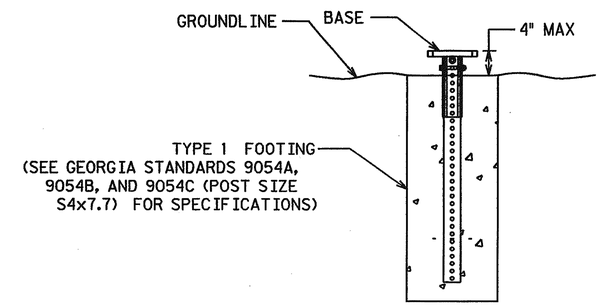

DETAIL B

DATE	REVISIONS

GEORGIA DEPARTMENT OF TRANSPORTATION
OFFICE OF TRAFFIC SAFETY & DESIGN

DETAILS OF
SQUARE TUBE POSTS

NO SCALE MARCH 2000

k:\ATL_Transp\GDOT\GDOT Standards\Dgns\Signing Details\Square Tube Posts.dgn
21-OCT-2002 09:51
s113865