STATE	PROJECT NUMBER	SHEET NO.	TOTAL SHEETS
GA.	NHS-M000-00(438)	4	

ALLOWABLE RANGES TABLE

FOR THIS PROJECT, CROSS SLOPES THAT ARE ADJUSTED TO "BEST FIT" EXISTING PAVEMENT SLOPES ARE SUBJECT TO THE FOLLOWING LIMITS:

A. NORMAL CROWN

SECTION WITH GRADES 0.5% OR GREATER	SECTION WITH GRADES LESS THAN 0.5%
1.50% - MINIMUM	1.50% - MINIMUM
2.00% - DESIRABLE	2.00% - DESIRABLE
2.50% - MAXIMUM	3.00% - MAXIMUM

B. SUPERELEVATION RATE
S.E. RATE SHOWN ON PLANS OR SE RATE EXISTING IN FIELD, WHICHEVER IS GREATER.

C. SUPERELEVATION TRANSITION LENGTH (LENGTH FROM FLAT POINT TO FULL SE)

	RATE OF CHANGE	CORRESPONDING DIFFERENCE IN GRADE BETWEEN PIVOT POINT AND EDGE OF PAVEMENT
MINIMUM	1:150	0.67%
DESIRABLE	1:200	0.50%
MAXIMUM	1:300	0.33%

LENGTH SHALL BE SET TO AVOID CREATING A FLAT GUTTER GRADE ON LOW SIDE AND TO AVOID FLAT CROSS SLOPES AT OR NEAR THE LOW POINT OF VERTICAL CURVES.

D. POSITIONING OF SUPERELEVATION TRANSITION LENGTH ON SIMPLE CURVES
50% OF TRANSITION INSIDE CURVE - MAXIMUM
33% OF TRANSITION INSIDE CURVE - DESIRABLE
20% OF TRANSITION INSIDE CURVE - MINIMUM

NOTE: CROWN WIPE-OUT SHALL BE AT THE SAME RATE AS THE SE TRANSITION.

E. SMOOTHING OF BREAKS IN EDGE PROFILE AT BEGIN AND END OF TRANSITION SHALL BE ACCOMPLISHED BY VERTICAL CURVE WITH A MINIMUM LENGTH (IN FEET) EQUAL TO THE SPEED DESIGN (IN mph).

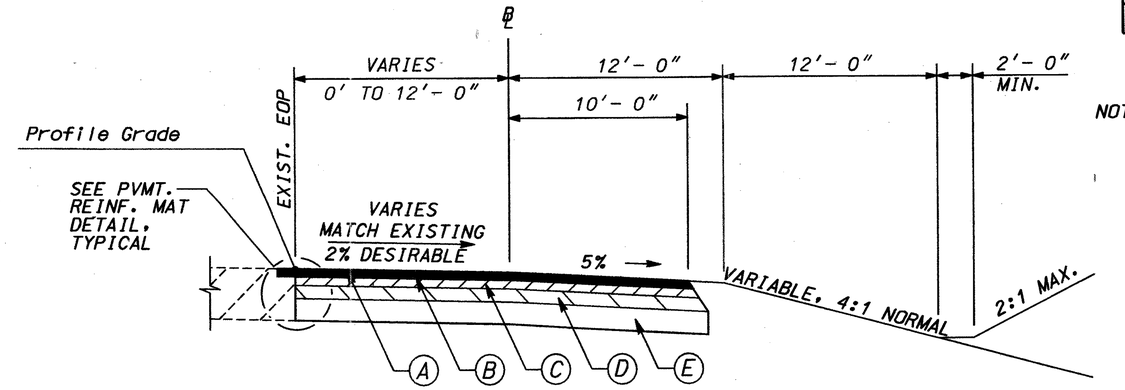

WEIGH STATION LANE EXTENSION (TS-1)

N.T.S.

NOTE: 16" GROUND IN PLACE RUMBLE STRIPS ARE REQUIRED ON THE WEIGH STATION ASPHALT ACCELERATION/DECELERATION LANE SHOULDERS.

NOTE: SEE CONSTRUCTION PLAN SHEETS FOR STATION LIMITS.

SLOPE CONTROLS		
SLOPE	CUT	FILL
4:1	--	0-10'
2:1	--	OVER 10'*

* GUARDRAIL REQUIRED
SEE TYPICAL SECTION DETAILS

NOTES:
1. SEE GA. STD. 9028C FOR SHOULDER SLOPES, WITHIN SUPERELEVATION.
2. TYPICAL SECTION APPLIES TO SB DECELERATION AND ACCELERATION LANES

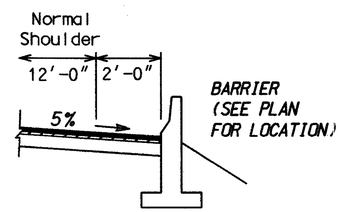

SHOULDER PAVING ADJACENT TO BARRIER

N.T.S.

PAVEMENT MATERIAL SCHEDULE

A	ASPH. CONC. 12.5 mm PEM, GP2 ONLY, POLYMER-MOD., 135 LBS/SY, SUPERPAVE DESIGN MIX LEVEL D
B	RECYCLED ASPH. CONC. 12.5 mm SUPERPAVE, GP2 ONLY, 165 LBS/SY, SUPERPAVE MIX DESIGN LEVEL D
C	RECYCLED ASPH. CONC. 19 mm SUPERPAVE, GP1 OR GP2, 220 LBS/SY, SUPERPAVE MIX DESIGN LEVEL D
D	RECYCLED ASPH. CONC. 25 mm SUPERPAVE, GP1 OR GP2, 440 LBS/SY, SUPERPAVE MIX DESIGN LEVEL C
E	GRADED AGGREGATE BASE, 10"

NOTE: 1-1/4" PEM SHALL EXTEND 18" BEYOND TRAVEL LANE ON THE OUTSIDE SHOULDER ONLY

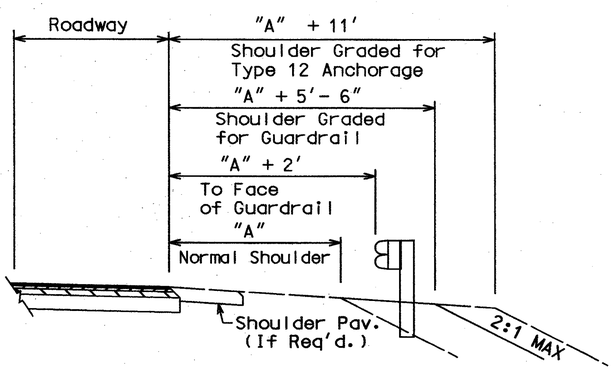

SHOULDER DETAIL FOR GUARDRAIL

N.T.S. SEE PLAN FOR LOCATION
SEE GA STD. 4051 OR 4052 FOR DETAILS

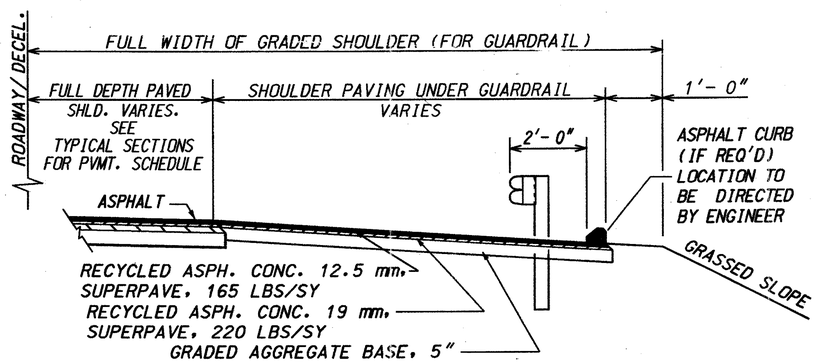

SHOULDER PAVING UNDER GUARDRAIL

N.T.S.

NOTE: AFTER GUARDRAIL POSTS HAVE BEEN INSTALLED THE SURFACE AREA AROUND THE POSTS SHALL BE SEALED WITH THE APPROPRIATE ASPHALT OR OTHER APPROVED MATERIAL AT NO ADDITIONAL PAYMENT IF THE ENGINEER DETERMINES IT NECESSARY.

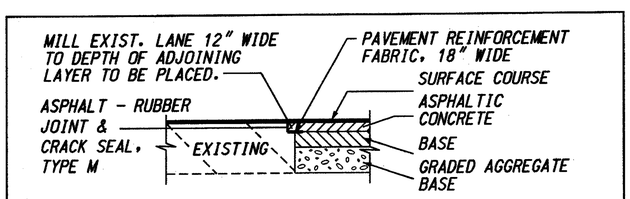

PAVEMENT REINFORCING MAT DETAIL

N.T.S.

DATE	REVISIONS	DATE	REVISIONS

PBSJ

STATE OF GEORGIA
DEPARTMENT
OF
TRANSPORTATION
OFFICE OF MAINTENANCE

GEORGIA
DEPARTMENT OF TRANSPORTATION
TYPICAL SECTION & DETAILS

I-75 CATOOSA COUNTY WEIGH STATION, SOUTHBOUND DECEL/ACCEL

10-JUN-2002 H:\T060327\M000438\Dgn\000438typl.dgn