STATE	PROJECT NUMBER	SHEET NO.	TOTAL SHEETS
GA.	NHS-M000-00 (437)	52	52

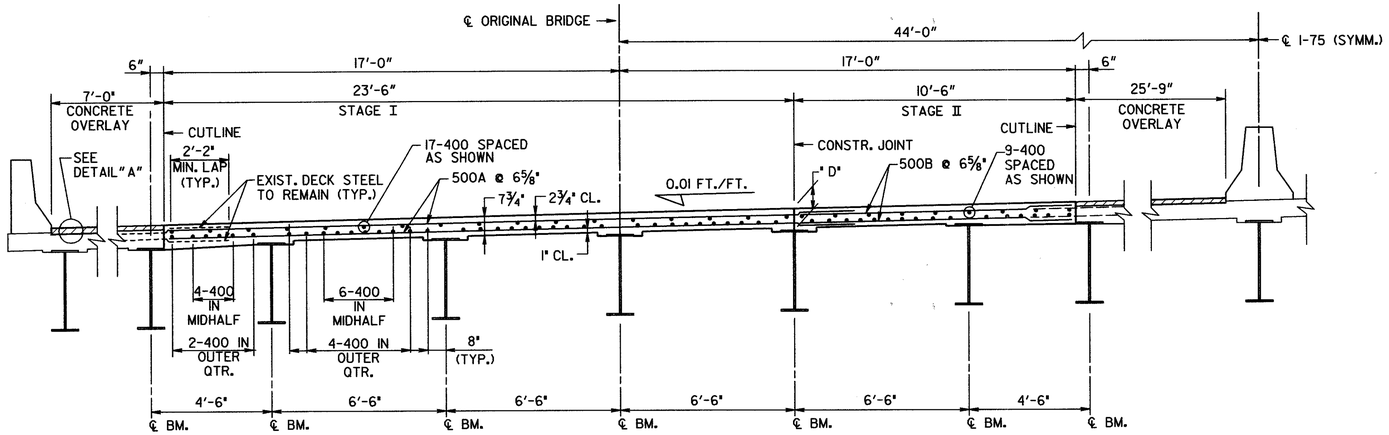

DECK SECTION - LEFT BRIDGE

(LOOKING AHEAD)

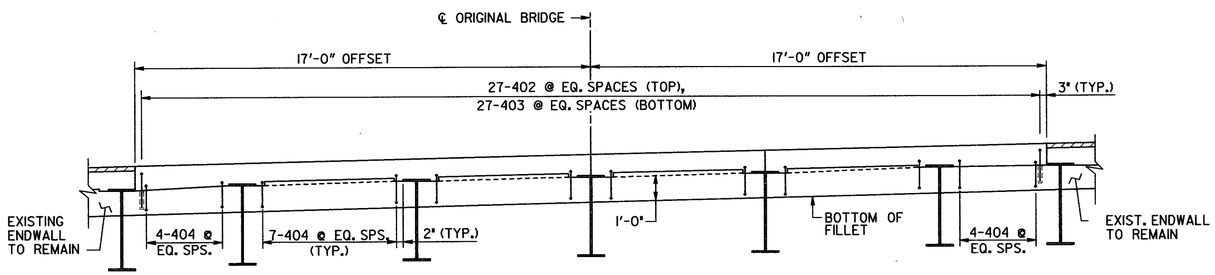

SECTION @ ENDWALL - LEFT BRIDGE

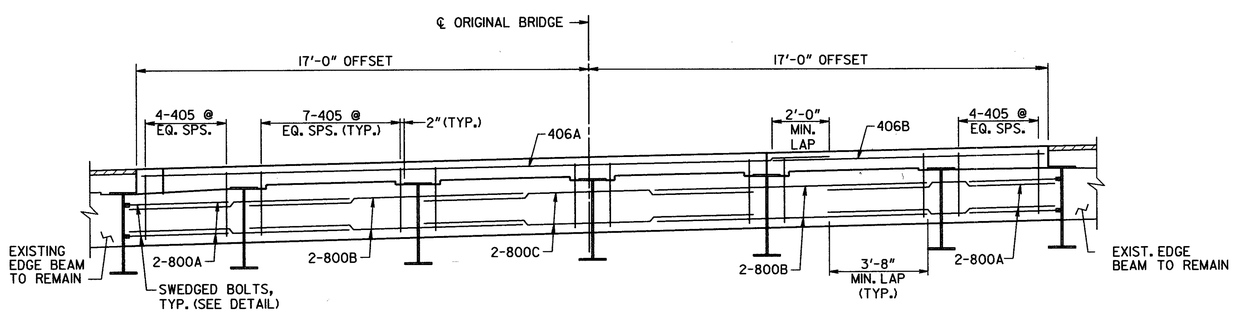

SECTION @ EDGE BEAM - LEFT BRIDGE

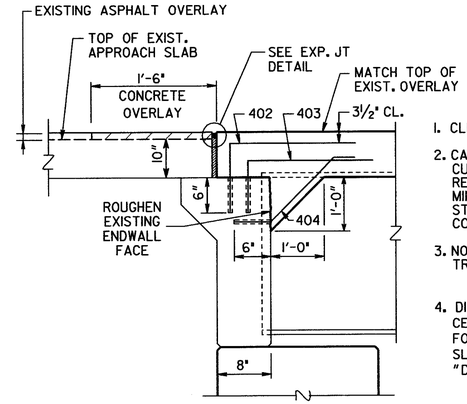

SLAB REINFORCEMENT NOT SHOWN.

SECTION THRU ENDWALL

NOTES

1. CLEARANCE OF REINFORCEMENT IS 2" UNLESS NOTED OTHERWISE.
2. CARE SHALL BE EXERCISED IN REMOVAL OF EXISTING CONCRETE TO MAKE CUTS VERTICAL AND TO RETAIN EXISTING REINFORCEMENT. EXISTING REINFORCEMENT BARS TO BE SPLICED INTO NEW WORK SHALL EXTEND A MINIMUM OF 1'-10" INTO NEW SECTION. ANY EXISTING REINFORCEMENT STEEL DAMAGED DURING REMOVAL SHALL BE REPLACED BY THE CONTRACTOR AT NO ADDITIONAL COST.
3. NON-CONTACT LAPS MAY BE USED BETWEEN EXISTING AND NEW TRANSVERSE DECK BARS.
4. DIMENSION "D" IS MEASURED FROM TOP OF SLAB TO TOP OF BEAM AT CENTERLINE OF BEARING. VARY "D" BETWEEN BEARINGS TO COMPENSATE FOR DEAD LOAD DEFLECTION AND VERTICAL CURVE. MAINTAIN CONSTANT SLAB THICKNESS AS SHOWN IN SECTIONS. "D" = 8¼" (LT. & RT. BRIDGES)

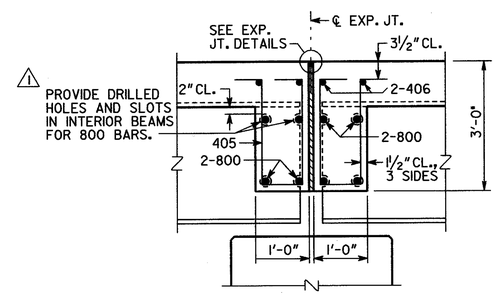

SLAB REINFORCEMENT NOT SHOWN.

SECTION THRU EDGE BEAM

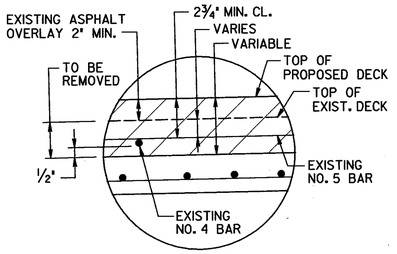

NOTE: THERE ARE NO COVER METER READINGS AVAILABLE FOR THIS BRIDGE. DECK OVERLAY SHALL MATCH TOP OF EXISTING ASPHALT OVERLAY.

DETAIL "A" 2

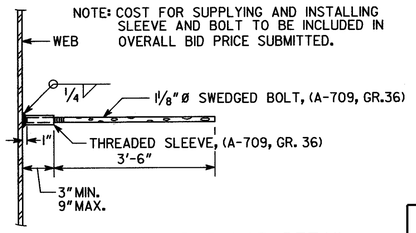

NOTE: COST FOR SUPPLYING AND INSTALLING SLEEVE AND BOLT TO BE INCLUDED IN OVERALL BID PRICE SUBMITTED.

EDGE BEAM BAR LAP DETAIL

BY	REVISIONS	DATE
GLE	NOTE REVISED	02-28-02
GLE	DETAIL REVISED	04-18-02

GEORGIA REGISTERED No. 16685 PROFESSIONAL ENGINEER SAMUEL L. POWELL, JR.

BRIDGE SHEET 5 OF 5

BRIDGE NO. 4 LT & RT

JBT J.B. Trimble, Inc.
6445 Powers Ferry Road
Atlanta GA 30339-2933
(770) 952-1022

GEORGIA
DEPARTMENT OF TRANSPORTATION
OPERATIONS DIVISION-OFFICE OF MAINTENANCE

DISTRICT 6 BRIDGE REPAIRS (DECK REHABILITATION)

I-75 OVER LITTLE CHICKAMAUGA CREEK

CATOOSA COUNTY NHS-M000-00 (437)

SCALE: AS SHOWN SEPTEMBER 2001

DESIGNED PJC CHECKED GLE REVIEWED EHG
DRAWN ITD DESIGN GROUP MAINTENANCE APPROVED STH