STATE	PROJECT NUMBER	SHEET NO.	TOTAL SHEETS
GA.	NHS-M000-00 (437)	47	52

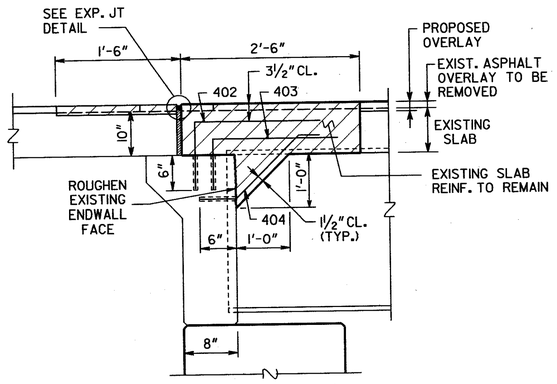

SLAB REINFORCEMENT NOT SHOWN.

SECTION THRU ENDWALL

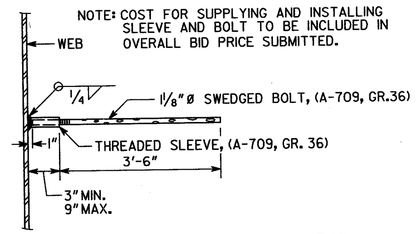

EDGE BEAM BAR LAP DETAIL

NOTES

1. CLEARANCE OF REINFORCEMENT IS 2" UNLESS NOTED OTHERWISE.
2. CARE SHALL BE EXERCISED IN REMOVAL OF EXISTING CONCRETE TO MAKE CUTS VERTICAL AND TO RETAIN EXISTING REINFORCEMENT. EXISTING REINFORCEMENT BARS TO BE SPLICED INTO NEW WORK SHALL EXTEND A MINIMUM OF 1'-10" INTO NEW SECTION. ANY EXISTING REINFORCEMENT STEEL DAMAGED DURING REMOVAL SHALL BE REPLACED BY THE CONTRACTOR AT NO ADDITIONAL COST.
3. NON-CONTACT LAPS MAY BE USED BETWEEN EXISTING AND NEW TRANSVERSE DECK BARS.

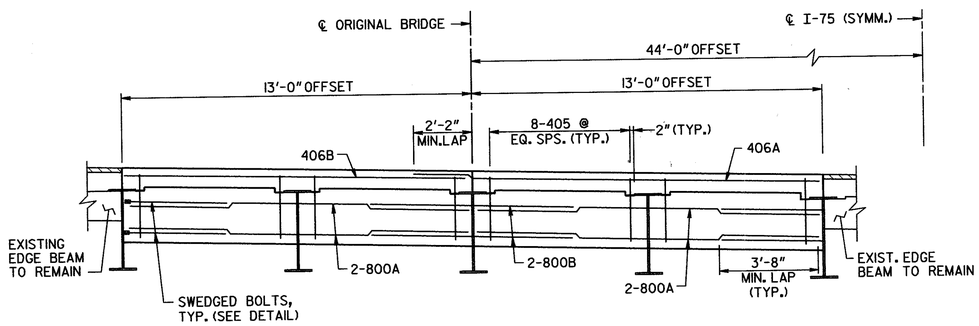

SECTION @ EDGE BEAM

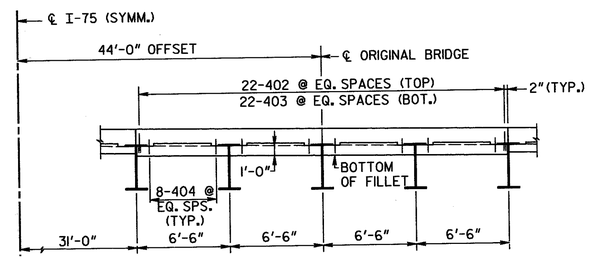

NOTE: PERFORM ENDWALL MODIFICATION PRIOR TO DECK OVERLAY.

SECTION @ ENDWALL

LOCATION	NO. OF LOC.	MARK	LENGTH FT.	LENGTH IN.	NO. BARS REQ'D.	TYPE	A	G	B FT.	B IN.	C FT.	C IN.	D FT.	D IN.	E FT.	E IN.
ENDWALL	2															
		402	3	6	44	3			2	6	1	0				
		403	3	2	44	3			2	6	0	8				
		404	3	3	64	34	6	6	0	6	1	3	1	0	1	3
EDGE BEAM	8															
		405	6	8	64	31	4	4	0	9	2	7	2	7		
		406A	17	6	4	1										
		406B	14	8	4	1										
		800A	14	0	16	1										
		800B	10	0	8	1										

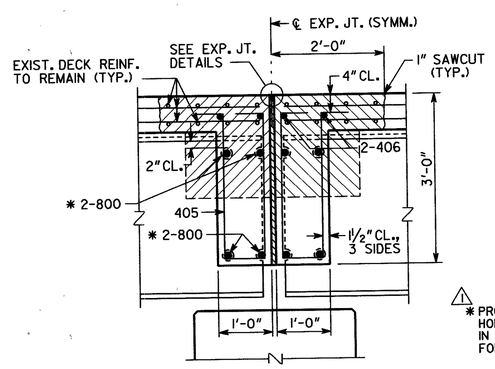

SECTION THRU EDGE BEAM

(BENTS 2 - 5)

1 * PROVIDE DRILLED HOLES AND SLOTS IN INTERIOR BEAMS FOR 800 BARS.

DENOTES CONCRETE TO BE REMOVED

BRIDGE NO. 3 LT. & RT.

JBT J.B. Trimble, Inc.
6445 Powers Ferry Road
Atlanta GA 30339-2933
(770) 952-1022

GEORGIA
DEPARTMENT OF TRANSPORTATION
OPERATIONS DIVISION-OFFICE OF MAINTENANCE

DISTRICT 6 BRIDGE REPAIRS (DECK REHABILITATION)
I-75 OVER SOUTH CHICKAMAUGA CREEK

CATOOSA COUNTY NHS-M000-00 (437)

SCALE: AS SHOWN SEPTEMBER 2001

REVISIONS	DATE	BY
1 NOTE REVISED	02-28-02	G.L.

GEORGIA REGISTERED No. 16685 PROFESSIONAL ENGINEER GARY L. POWELL JR.

02-28-02

BRIDGE SHEET 3 OF 3

DESIGNED PJC CHECKED GLE REVIEWED EHG
DRAWN ITD DESIGN GROUP MAINTENANCE APPROVED STH

C:\DGN\2019\CT4\BOL4-3DS.DGN 9-18-01 ITD