STATE	PROJECT NUMBER	SHEET NO.	TOTAL SHEETS
GA.	NHS-M000-00 (437)	45	52

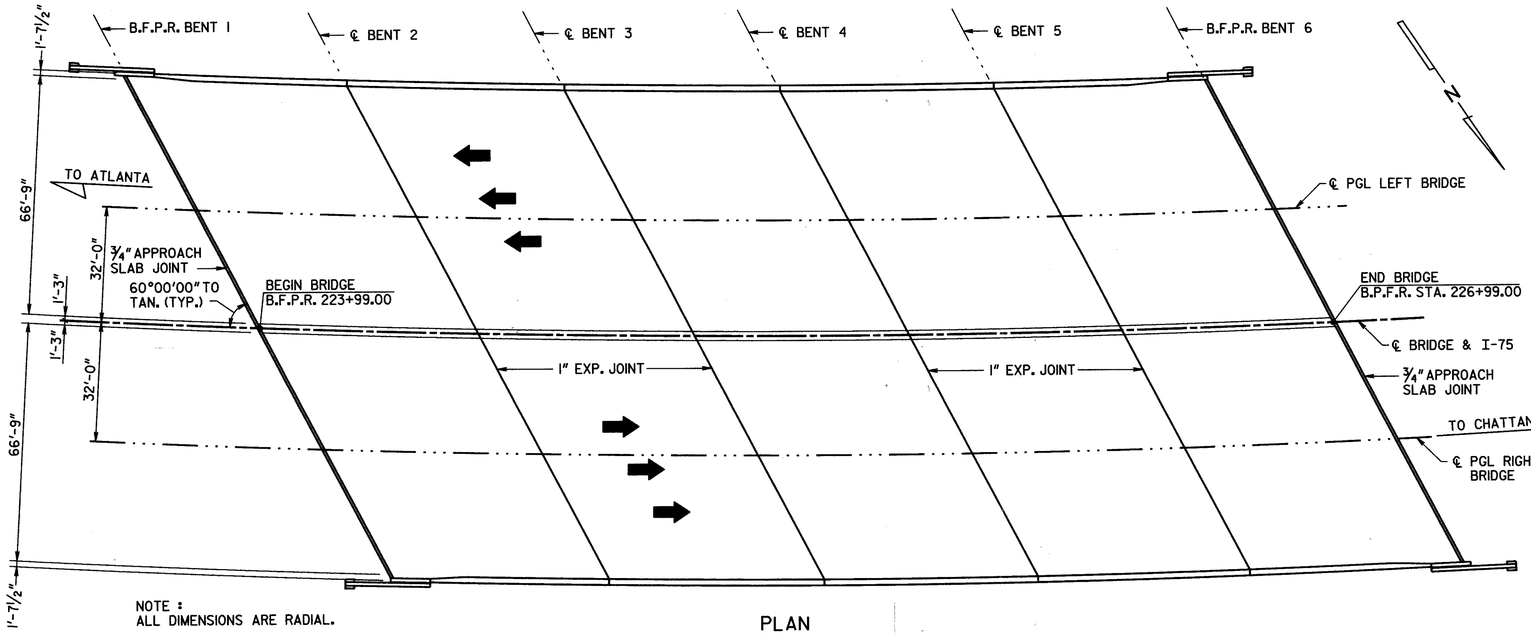

NOTE :
ALL DIMENSIONS ARE RADIAL.

PLAN

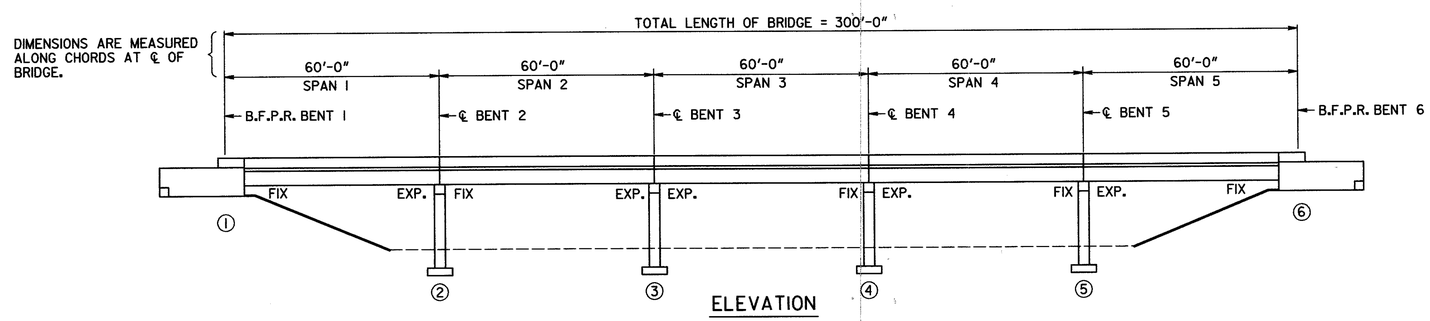

ELEVATION

WORK CONSISTS OF

1. REMOVAL OF THE EXISTING ASPHALT OVERLAY AND EXISTING CONCRETE DECK TO ½" BELOW THE BOTTOM OF THE TOP OF EXISTING DECK AND REPLACEMENT WITH A NEW CONCRETE OVERLAY.
2. MODIFICATION OF ORIGINAL ENDWALLS & REPLACEMENT OF EDGE BEAMS.

DESIGN DATA

SPECIFICATIONS ..... AASHTO 1996 WITH 1997, 1998 AND 1999 INTERIMS (DESIGNED FOR SEISMIC PERFORMANCE CATEGORY A)

TYPICAL HS20-44 AND/OR MILITARY LOADING ..... IMPACT ALLOWED

24 HOUR ACCELERATED STRENGTH CONCRETE..... f'_c = 3,500 PSI

REINFORCEMENT STEEL ..... GRADE 60, FY = 60,000 PSI

SUMMARY OF QUANTITIES ⚠1

PAY ITEM NUMBER	QUANTITY	UNIT	PAY ITEM
449-1620	159	LF	LOW-DENSITY, CLOSED-CELL, X-LINKED, ETHYLENE VINYL ACETATE, POLYETHYLENE COPOLYMER, NITROGEN-BLOWN SEAL, BR NO-3, BENT NO-1
449-1620	159	LF	LOW-DENSITY, CLOSED-CELL, X-LINKED, ETHYLENE VINYL ACETATE, POLYETHYLENE COPOLYMER, NITROGEN-BLOWN SEAL, BR NO-3, BENT NO-2
449-1620	159	LF	LOW-DENSITY, CLOSED-CELL, X-LINKED, ETHYLENE VINYL ACETATE, POLYETHYLENE COPOLYMER, NITROGEN-BLOWN SEAL, BR NO-3, BENT NO-3
449-1620	159	LF	LOW-DENSITY, CLOSED-CELL, X-LINKED, ETHYLENE VINYL ACETATE, POLYETHYLENE COPOLYMER, NITROGEN-BLOWN SEAL, BR NO-3, BENT NO-4
449-1620	159	LF	LOW-DENSITY, CLOSED-CELL, X-LINKED, ETHYLENE VINYL ACETATE, POLYETHYLENE COPOLYMER, NITROGEN-BLOWN SEAL, BR NO-3, BENT NO-5
449-1620	159	LF	LOW-DENSITY, CLOSED-CELL, X-LINKED, ETHYLENE VINYL ACETATE, POLYETHYLENE COPOLYMER, NITROGEN-BLOWN SEAL, BR NO-3, BENT NO-6
500-0100	4360	SY	GROOVED CONCRETE
504-0600	77	CY	TWENTY-FOUR HOUR ACCELERATED STRENGTH CONC, BR NO-3
511-3000	LUMP	LS	SUPERSTR REINF STEEL, BR NO-3 (14429)
519-0401	4373	SY	CONCRETE OVERLAY, VARIABLE THK - FAST TRACK
540-1202	LUMP	LS	REMOVAL OF PARTS OF EXISTING BR, BR NO - 3

HORIZONTAL CURVE DATA

PI = STA. 221+13.9
Δ = 21°-13' RT.
D = 01°-30'
T = 715.4'
L = 1414.4'
SE = 0.04%
R = 3819.72'

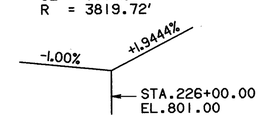

LVC = 500'

GRADE DATA

(FROM EXISTING BRIDGE PLANS)

GENERAL NOTES

SPECIFICATIONS - GEORGIA STANDARD SPECIFICATIONS, 1993 EDITION AND 1997 SUPPLEMENTAL SPECIFICATIONS, AS MODIFIED BY CONTRACT DOCUMENTS.

REINFORCING STEEL -ALL REINFORCING STEEL SHALL BE PLACED AND TIED IN ACCORDANCE WITH THE GEORGIA DOT SPECIFICATIONS. WELDING OF REINFORCING STEEL WILL NOT BE PERMITTED.

CHAMFER - ALL EXPOSED CONCRETE EDGES SHALL BE CHAMFERED ¾ INCH UNLESS OTHERWISE NOTED.

CONCRETE REMOVAL - SEE SPECIAL PROVISIONS.

CONCRETE OVERLAY - SEE SPECIAL PROVISION - SECTION 519 -"FAST TRACK BRIDGE DECK CONVENTIONAL CONCRETE OVERLAY".

TRAFFIC CONTROLS - SEE SPECIAL PROVISIONS FOR TRAFFIC CONTROLS AND TRAFFIC CONTROL PAYMENT.

EXISTING BRIDGE PLANS - PLANS FOR THE EXISTING BRIDGE MAY BE PURCHASED BY CONTACTING THE PLANS REPRODUCTION OFFICE AT (404) 656-5401. THE ORIGINAL BRIDGE WAS BUILT UNDER PROJECT NUMBER I-75-3 (8) 358 AND WAS WIDENED UNDER PROJECT NUMBER ID-75-3 (103) AND IR-75-3 (152).

DIMENSIONS AND ELEVATIONS - ALL DIMENSIONS AND ELEVATIONS SHALL BE VERIFIED IN THE FIELD BY THE CONTRACTOR PRIOR TO ORDERING MATERIALS OR BUILDING FORMS.

EPOXY RESIN ADHESIVE - EPOXY RESIN ADHESIVE TYPE II SHALL BE APPLIED TO ALL HARDENED CONCRETE SURFACES JUST PRIOR TO POURING THE CONCRETE FOR THE NEXT STAGE OF CONSTRUCTION, SEE SECTION 886 OF THE GEORGIA DOT SPECIFICATIONS. COST OF EPOXY ADHESIVE AND ITS APPLICATION SHALL BE INCLUDED IN THE OVERALL BID SUBMITTED.

EXISTING REINFORCEMENT - EXISTING REINFORCEMENT TO BE UTILIZED IN NEW CONSTRUCTION SHALL BE BENT IN A MANNER TO PROVIDE THE MAXIMUM LAP POSSIBLE OR AS SHOWN ON THE PLANS. EXISTING REINFORCEMENT SHALL BE THOROUGHLY CLEANED OF CONCRETE SCALE AND RUST BEFORE BONDING INTO NEW CONSTRUCTION.

GROOVED CONCRETE -THE ENTIRE LENGTH OF THE BRIDGE SHALL BE GROOVED TRANSVERSELY AS PER SECTION 500.11.C.6.C.(2) OF THE GEORGIA DOT SPECIFICATIONS.

SALVAGE MATERIAL - NO MATERIAL REMOVED FROM THE EXISTING STRUCTURE SHALL BE SALVAGED FOR USE BY THE GEORGIA DEPARTMENT OF TRANSPORTATION.

INCIDENTAL ITEMS - COST INCIDENTAL TO THE WORK THAT IS NOT SPECIFICALLY COVERED BY THE GEORGIA STANDARD SPECIFICATIONS, SUPPLEMENTAL SPECIFICATIONS, AND/OR SPECIAL PROVISIONS SHALL BE INCLUDED IN THE OVERALL BID SUBMITTED. THIS INCLUDES THE COST OF CLEANING AND BENDING OF EXISTING REINFORCEMENT, JOINT FILLERS, AND OTHER INCIDENTAL ITEMS NECESSARY TO COMPLETE THE WORK.

EROSION CONTROL - EROSION CONTROL ITEMS REQUIRED BY THE ENGINEER TO FILTER RUN-OFF FROM HYDRO-DEMOLITION OPERATIONS SHALL BE FURNISHED, INSTALLED, MAINTAINED AND REMOVED BY THE CONTRACTOR. COST SHALL BE INCLUDED IN THE OVERALL BID SUBMITTED.

REMOVAL OF PARTS OF EXISTING BRIDGE - COST FOR REMOVAL OF PORTIONS OF EXISTING DECK SLAB, EDGE BEAMS AND ENDWALLS SHALL BE INCLUDED IN THE PRICE BID FOR ITEM 540 REMOVAL OF PARTS OF EXISTING BRIDGE.

EXISTING BRIDGE SERIAL NO.	047-0029-0
EXISTING BRIDGE ID NO.	047-0040ID-345.21N
PROJECT PI NO.	M000437

BRIDGE NO. 3 LT. & RT.

JBT
J.B. Trimble, Inc.
6445 Powers Ferry Road
Atlanta GA 30339-2933
(770) 952-1022

GEORGIA
DEPARTMENT OF TRANSPORTATION
OPERATIONS DIVISION-OFFICE OF MAINTENANCE

DISTRICT 6 BRIDGE REPAIRS (DECK REHABILITATION)
I-75 OVER SOUTH CHICKAMAUGA CREEK

CATOOSA COUNTY NHS-M000-00 (437)

SCALE: AS SHOWN SEPTEMBER 2001

DESIGNED PJC	CHECKED GLE	REVIEWED EHG
DRAWN ITD	DESIGN GROUP MAINTENANCE	APPROVED STH

⚠1

BY	REVISIONS	DATE
GLE	PAY ITEMS REMOVED	01-08-02

GEORGIA REGISTERED No. 16685 PROFESSIONAL ENGINEER GARY L. POWELL
01-10-02

BRIDGE SHEET 1 OF 3

C:\DGN\2019\CT4\B0L4-3 PE.DGN 9-18-01 ITD