STATE	PROJECT NUMBER	SHEET NO.	TOTAL SHEETS
GA.	NHS-M000-00 (437)	39	52

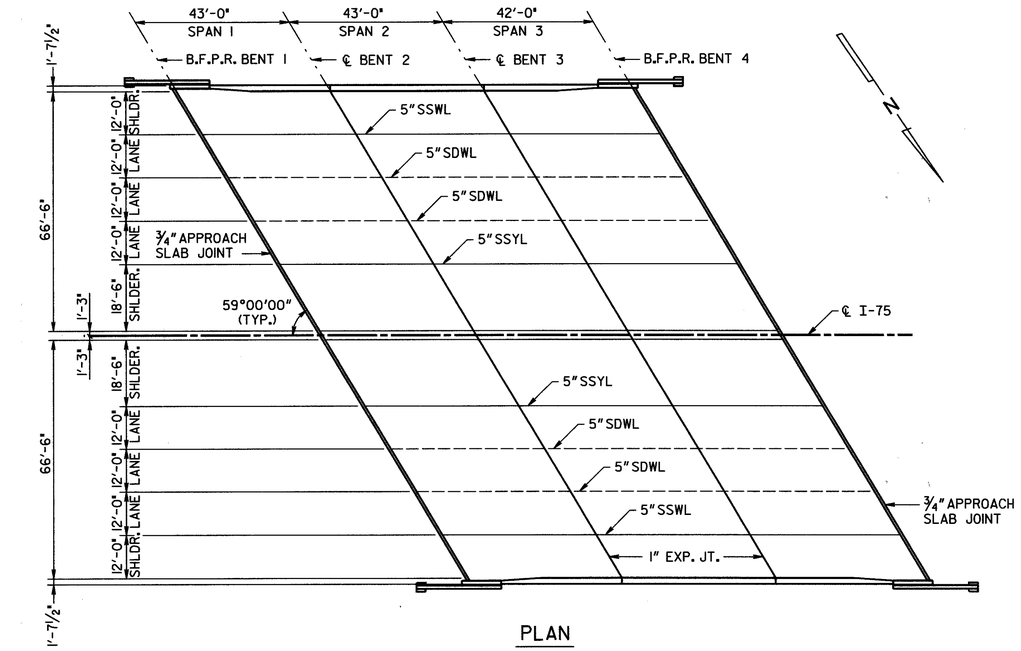

PLAN

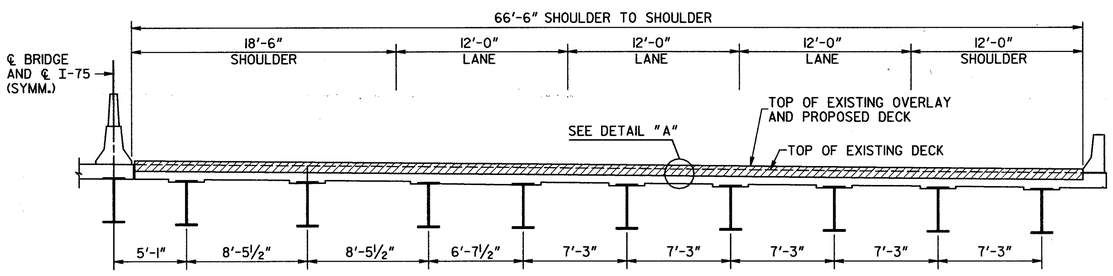

SECTION THRU SLAB
(LOOKING AHEAD)

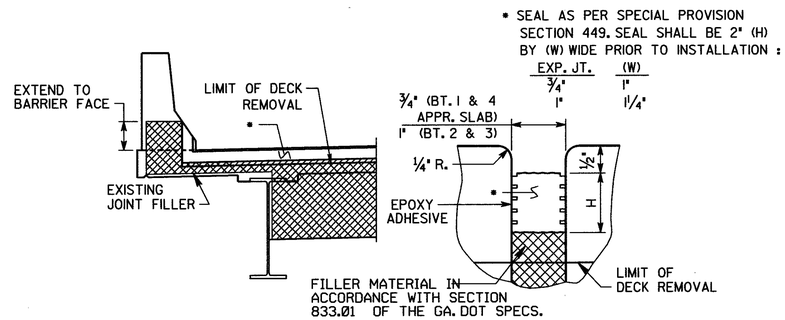

EXPANSION JOINT DETAILS

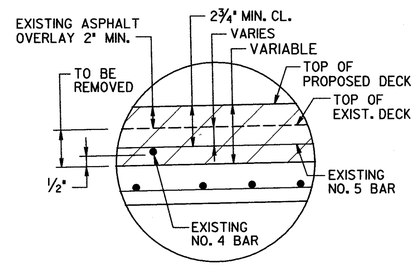

NOTE: THERE ARE NO COVER METER READINGS AVAILABLE FOR THIS BRIDGE. DECK OVERLAY SHALL MATCH TOP OF EXISTING ASPHALT OVERLAY.

DETAIL "A" △1

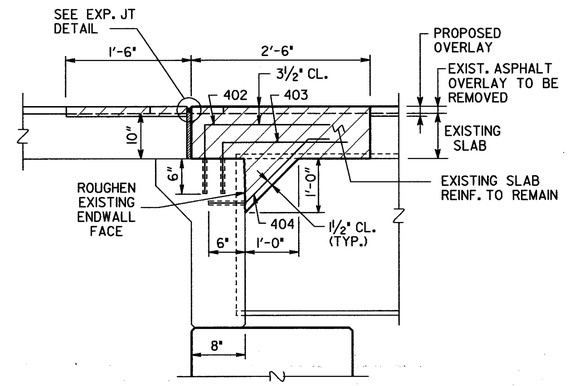

SLAB REINFORCEMENT NOT SHOWN.

SECTION THRU ENDWALL

NOTES :

1. THERE ARE NO COVER METER READINGS AVAILABLE FOR THIS BRIDGE. DECK OVERLAY SHALL MATCH TOP OF EXISTING ASPHALT OVERLAY.
2. THE APPROXIMATE DEPTH OF EXISTING ASPHALT IS 2" MINIMUM.
3. ENDWALL MODIFICATION SHALL BE COMPLETED PRIOR TO DECK OVERLAY.

LOCATION	NO. OF LOC.	MARK	LENGTH FT.	LENGTH IN.	NO. BARS REQ'D.	TYPE	A	G	B FT.	B IN.	C FT.	C IN.	D FT.	D IN.	E FT.	E IN.
ENDWALL	2															
		402	3-	6	38	3			2-	6	1-	0				
		403	3-	2	38	3			2-	6	0-	8				
		404	3-	3	48	34	6	6	0-	6	1-	3	1-	0	1-	3

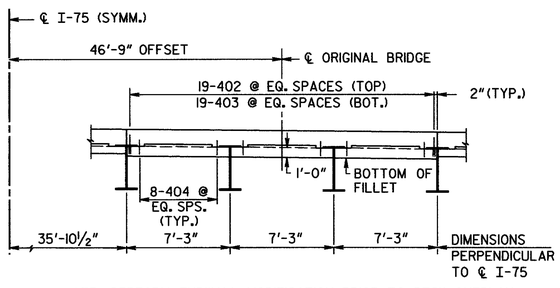

NOTE: PERFORM ENDWALL MODIFICATION PRIOR TO DECK OVERLAY.

SECTION AT ENDWALL

PAVEMENT MARKING LEGEND

5" SSYL - 5" SINGLE SOLID YELLOW LINE
5" SSWL - 5" SINGLE SOLID WHITE LINE
5" SDWL - 5" SINGLE DASHED WHITE LINE

NOTE: TEMPORARY STRIPING SHALL BE USED DURING CONSTRUCTION. PREFORMED STRIPING SHALL BE DONE AFTER ALL DECK OVERLAY WORK IS COMPLETED. THE COST OF TEMPORARY STRIPING SHALL BE INCLUDED IN THE COST FOR TRAFFIC CONTROL.

BRIDGE NO. 1LT. & RT.

JBT J.B. Trimble, Inc.
6445 Powers Ferry Road
Atlanta GA 30339-2933
(770) 952-1022

GEORGIA
DEPARTMENT OF TRANSPORTATION
OPERATIONS DIVISION-OFFICE OF MAINTENANCE

DISTRICT 6 BRIDGE REPAIRS (DECK REHABILITATION)
I-75 OVER C.R. 210

CATOOSA COUNTY NHS-M000-00 (437)

SCALE: AS SHOWN SEPTEMBER 2001

REVISIONS	BY	DATE
△1 DETAIL REVISED	GLE	04-18-02

GEORGIA REGISTERED No. 16885 PROFESSIONAL ENGINEER SAMUEL L. POWELL, JR.

BRIDGE SHEET 2 OF 2

DESIGNED PJC CHECKED GLE REVIEWED EHG
DRAWN ITD DESIGN GROUP MAINTENANCE APPROVED STH

C:\DGN\2019\CT4\BOL4-1DK.DGN 9-18-01 ITD