STATE	PROJECT NUMBER	SHEET NO.	TOTAL SHEETS
GA.	NHS-M000-00 (436)	50	50

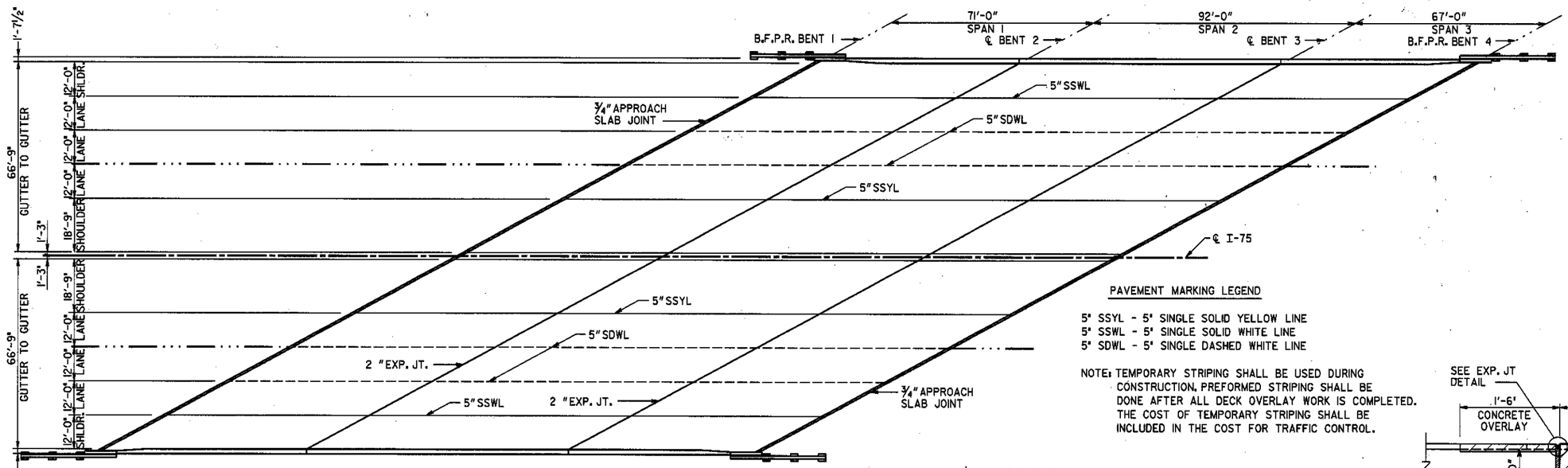

PLAN

PAVEMENT MARKING LEGEND

5" SSYL - 5" SINGLE SOLID YELLOW LINE
5" SSWL - 5" SINGLE SOLID WHITE LINE
5" SDWL - 5" SINGLE DASHED WHITE LINE

NOTE: TEMPORARY STRIPING SHALL BE USED DURING CONSTRUCTION. PREFORMED STRIPING SHALL BE DONE AFTER ALL DECK OVERLAY WORK IS COMPLETED. THE COST OF TEMPORARY STRIPING SHALL BE INCLUDED IN THE COST FOR TRAFFIC CONTROL.

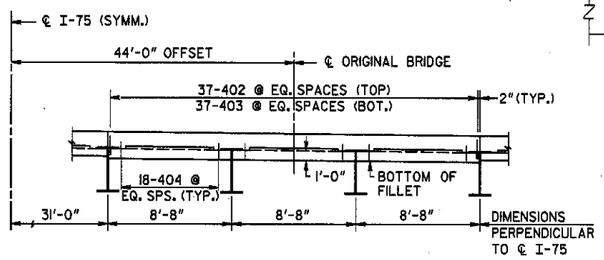

NOTE: PERFORM ENDWALL MODIFICATION PRIOR TO DECK OVERLAY.

SECTION AT ENDWALL

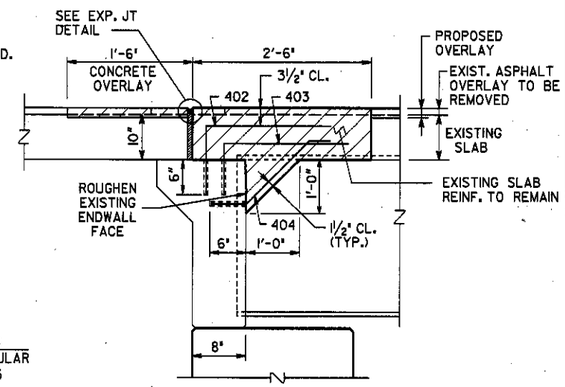

SLAB REINFORCEMENT NOT SHOWN.

SECTION THRU ENDWALL

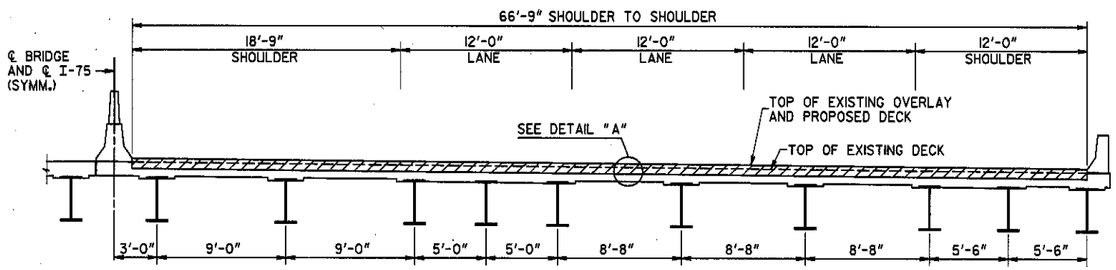

SECTION THRU SLAB
(LOOKING AHEAD)

NOTES :

1. THERE ARE NO COVER METER READINGS AVAILABLE FOR THIS BRIDGE. DECK OVERLAY SHALL MATCH TOP OF EXISTING ASPHALT OVERLAY.
2. THE APPROXIMATE DEPTH OF EXISTING ASPHALT IS 2" MINIMUM.
3. ENDWALL MODIFICATION SHALL BE COMPLETED PRIOR TO DECK OVERLAY.

LOCATION	NO. OF LOC.	MARK	LENGTH FT.	LENGTH IN.	NO. BARS REQ'D.	TYPE	A	G	B FT.	B IN.	C FT.	C IN.	D FT.	D IN.	E FT.	E IN.
ENDWALLS	2															
		402	3	6	74	3			2	6	1	0				
		403	3	2	74	3			2	6	0	8				
		404	3	3	108	34	6	6	0	6	1	3	1	0	1	3

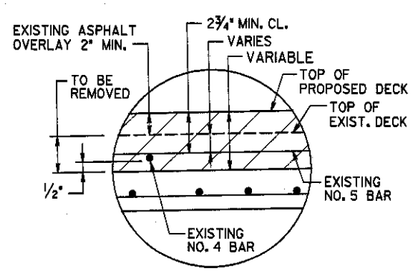

NOTE: THERE ARE NO COVER METER READINGS AVAILABLE FOR THIS BRIDGE. DECK OVERLAY SHALL MATCH TOP OF EXISTING ASPHALT OVERLAY.

DETAIL "A" △1

• SEAL AS PER SPECIAL PROVISION SECTION 449. SEAL SHALL BE 2" (H) BY (W) WIDE PRIOR TO INSTALLATION :

EXP. JT.	(W)
¾"	1"
2"	2½"

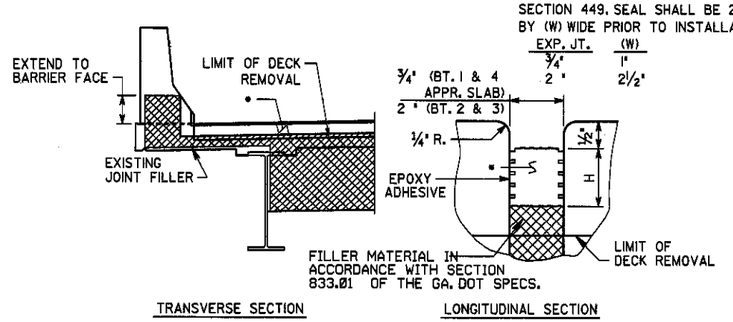

EXPANSION JOINT DETAILS

BRIDGE NO. 4 LT. & RT.

JBT J.B. Trimble, Inc.
6445 Powers Ferry Road
Atlanta GA 30339-2933
(770) 952-1022

GEORGIA
DEPARTMENT OF TRANSPORTATION
OPERATIONS DIVISION-OFFICE OF MAINTENANCE

DISTRICT 6 BRIDGE REPAIRS (DECK REHABILITATION)
I-75 OVER S.R. 201

WHITFIELD COUNTY NHS-M000-00 (436)

SCALE: AS SHOWN AUGUST 2001

REVISIONS	BY	DATE
DETAIL REVISED	GLE	04-18-02

GEORGIA REGISTERED No. 18685 PROFESSIONAL ENGINEER SAMUEL L. POWELL, JR.

BRIDGE SHEET 2 OF 2

DESIGNED PJC CHECKED GLE REVIEWED EHG
DRAWN ITD DESIGN GROUP MAINTENANCE APPROVED STH

C:\DGN\2019\CT3\B0L3-4DK.DGN 5-18-01 ITD