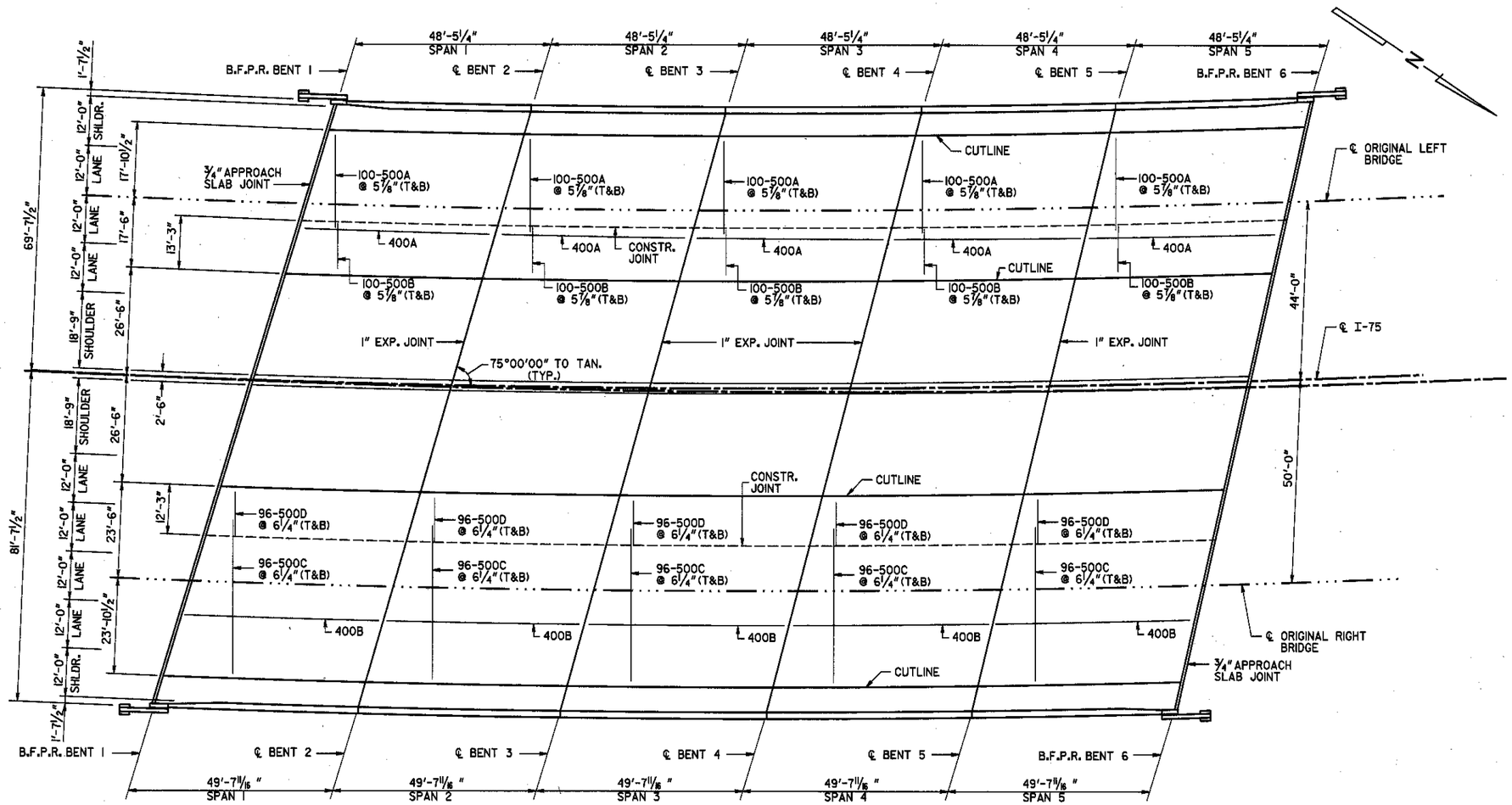

PLAN

STATE	PROJECT NUMBER	SHEET NO.	TOTAL SHEETS
GA.	NHS-M000-00 (436)	39	50

LOCATION	NO. OF LOC.	MARK	LENGTH FT.	LENGTH IN.	NO. BARS REQ'D.	TYPE	AG		B FT.	B IN.	C FT.	C IN.	D FT.	D IN.	E FT.	E IN.
SPAN 1 & 5	2															
		400A	48	1	86	1										
		400B	49	3	104	1										
		402	3	6	59	3			2	6	1	0				
		403	3	2	59	3			2	6	0	8				
		404	3	3	89	34	6	6	0	6	1	3	1	0	1	3
		405	6	8	89	31	4	4	0	9	2	7	2	7		
		406A	25	3	2	1										
		406B	13	4	2	1										
		406C	23	2	2	1										
		406D	12	4	2	1										
		500A	24	5	200	1										
		500B	12	11	200	1										
		500C	37	4	192	1										
		500D	12	0	192	1										
		800A	14	3	4	1										
		800B	16	9	4	1										
		800C	13	11	4	1										
		800D	9	6	4	1										
		800E	11	6	16	1										
		800F	12	9	4	1										
SPAN 2,3 & 4	3															
		400A	48	1	86	1										
		400B	49	3	104	1										
		405	6	8	178	31	4	4	0	9	2	7	2	7		
		406A	25	3	4	1										
		406B	13	4	4	1										
		406C	38	6	4	1										
		406D	12	4	4	1										
		500A	24	5	200	1										
		500B	12	11	200	1										
		500C	37	4	192	1										
		500D	12	0	192	1										
		800A	14	3	8	1										
		800B	16	9	8	1										
		800C	13	11	8	1										
		800D	9	6	8	1										
		800E	11	6	32	1										
		800F	12	9	8	1										

BRIDGE NO. 2 LT & RT

* SEAL AS PER SPECIAL PROVISION SECTION 449. SEAL SHALL BE 2" (H) BY (W) WIDE PRIOR TO INSTALLATION.

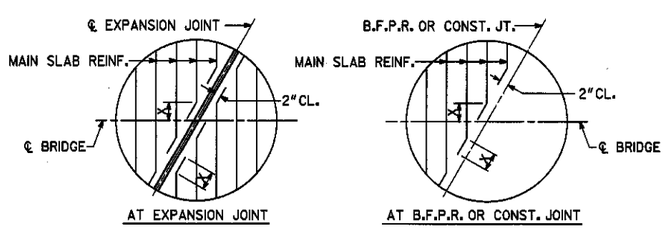

BARS ARE DETAILED IN BAR DETAILS AS EQUIVALENT FULL LENGTH BARS.

BAR BENDING DETAILS AT SKEWED JOINTS

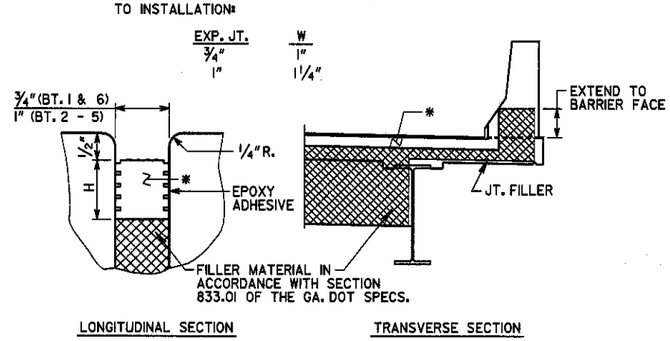

EXPANSION JOINT DETAILS

JBT
J.B. Trimble, Inc.
6445 Powers Ferry Road
Atlanta GA 30339-2933
(770) 952-1022

GEORGIA
DEPARTMENT OF TRANSPORTATION
OPERATIONS DIVISION-OFFICE OF MAINTENANCE

DISTRICT 6 BRIDGE REPAIRS (DECK REHABILITATION)

I-75 OVER MILL CREEK

WHITFIELD COUNTY NHS-M000-00 (436)

SCALE: AS SHOWN AUGUST 2001

GEORGIA REGISTERED No. 16685 PROFESSIONAL ENGINEER STEVEN L. POWELL
10-09-01

BY	REVISIONS	DATE

BRIDGE SHEET 4 OF 6

DESIGNED PJC | CHECKED GLE | REVIEWED EHG
DRAWN ITD | DESIGN GROUP MAINTENANCE | APPROVED STH

C:\DGN\2019\CT3\BOL3-2DK.DGN 5-18-01 ITD