STATE	PROJECT NUMBER	SHEET NO.	TOTAL SHEETS
GA.	NHS-M000-00(416)	43	43

* SEAL AS PER SPECIAL PROVISION SECTION 449. SEAL SHALL BE 2" BY 1½" BT. 1, 1¾" BT. 4 WIDE PRIOR TO INSTALLATION.

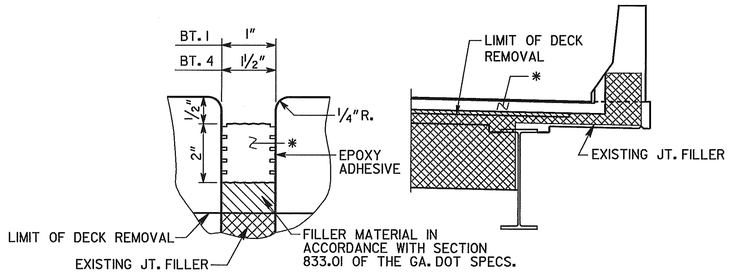

EXPANSION JOINT DETAILS AT BACKWALL

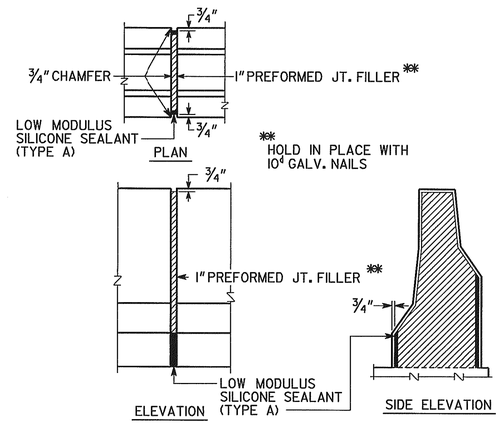

DETAILS OF 1" EXPANSION JOINT IN BARRIER

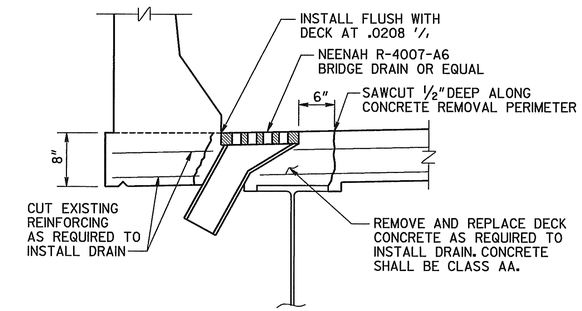

DECK DRAIN DETAIL

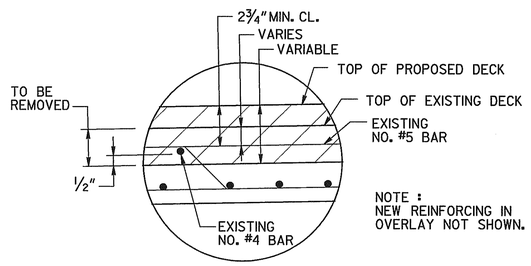

DETAIL "A"

** AT CONTRACTOR'S OPTION, 10" RADIUS MAY BE REPLACED BY STRAIGHT INTERSECTING SLOPES.

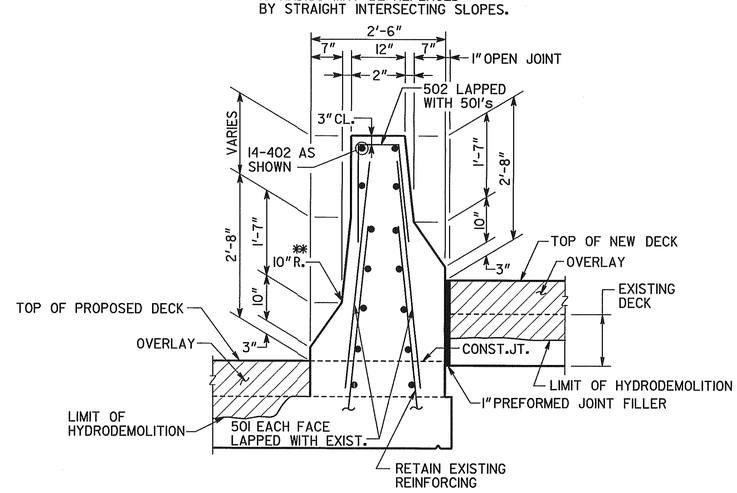

MEDIAN BARRIER DETAIL

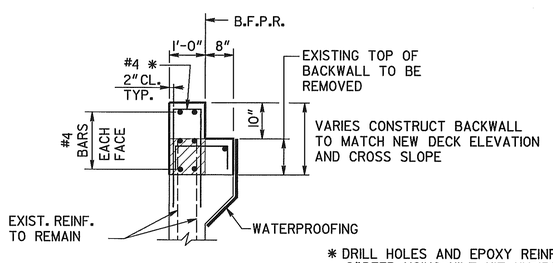

SECTION B-B

* DRILL HOLES AND EPOXY REINFORCING 6" DEEP USING HILT HIT HY-150 SYSTEM OR APPROVED EQUAL.

NOTE :
CONSTRUCT PORTION OF BACKWALL ABOVE PAVING REST AFTER DECK IS PLACED. CONSTRUCTION SHALL MATCH STAGING. COST OF REMOVING AND RECONSTRUCTING BACKWALL, INCLUDING CONCRETE AND REINFORCING, SHALL BE INCLUDED IN PRICE BID FOR ITEM 500-3800, CLASS A CONCRETE, INCL REINF STEEL.

BAR 501	4'-0"
BAR 402A	23'-3"
BAR 402B	22'-10"

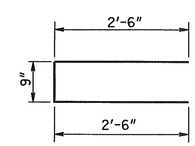

BAR 502

BRIDGE NO. 1 LT. AND 1 RT.

JBT J.B. Trimble, Inc.
6445 Powers Ferry Road
Atlanta GA 30339-2933
(770) 952-1022

GEORGIA
DEPARTMENT OF TRANSPORTATION
OPERATIONS DIVISION-OFFICE OF MAINTENANCE

MISCELLANEOUS DETAILS
I-75 OVER LITTLE TOWALIGA RIVER
MONROE COUNTY NHS-M000-00(416)

SCALE: AS SHOWN JUNE 2000

REVISIONS	BY	DATE
GENERAL	SLP	08/03/00

GEORGIA REGISTERED No. 16685 PROFESSIONAL SAMUEL L. POWELL, JR.
03-21-01

BRIDGE SHEET 4 OF 4

DESIGNED SLP | CHECKED GLE | REVIEWED BKS
DRAWN ITD | DESIGN GROUP MAINTENANCE | APPROVED EHG

C:\DGN\ 2019\BOL I-IMD.DGN 8-3-00 ITD

2/19/2008 1:23:23 PM \\GDOT-DSN1\GOPLOT\QCF\Road_Design_Tiff-18x12_to_Tiff-36x24.qcf wnguyen C:\Documents and Settings\wnguyen\Desktop\M000(416)\Construction\Plan Sheet\M000(416)_0063.tif GO-RD-Plans-Review