Wed Jan 20 13:09:05 1999 \\GDOT_GO_SV20\GCF\OSDMYLAR.acf posta M:\standard\English\English\500Im1.prf

STATE	PROJECT NUMBER	SHEET NO.	TOTAL SHEETS
GA.		36	43

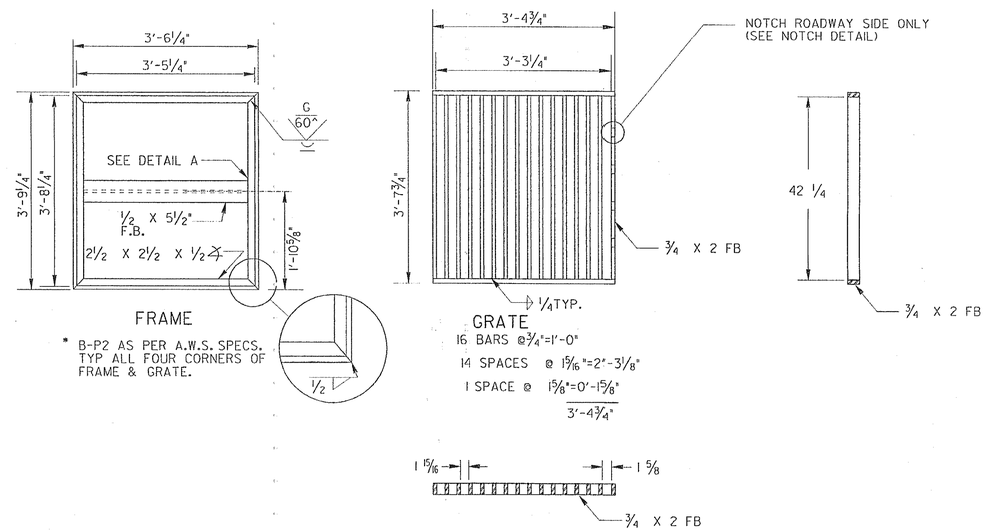

FRAME

* B-P2 AS PER A.W.S. SPECS. TYP ALL FOUR CORNERS OF FRAME & GRATE.

GRATE

16 BARS @ ¾"=1'-0"
14 SPACES @ 1 5/16"=2'-3⅛"
1 SPACE @ 1⅝"=0'-1⅝"
3'-4¾"

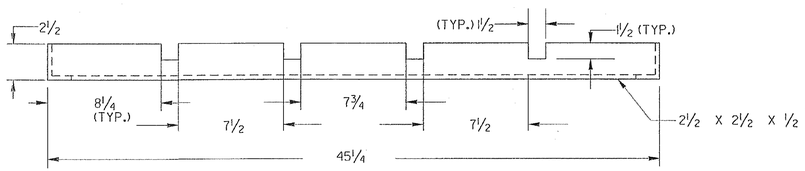

FRAME

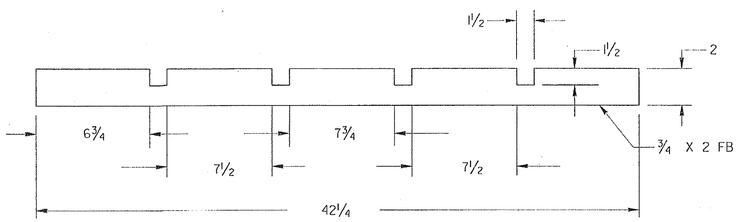

¾ X 2 FB (1REQ'D)

NOTCH DETAIL

G.J.P.	REDRAWN	6-30-98	
R.M.U.	ADD SPECIAL NOTE	8-15-97	
R.M.U.	ADD NOTE 6	9-11-94	
BY	REVISION	DATE	

DEPARTMENT OF TRANSPORTATION
STATE OF GEORGIA

STANDARD
DROP INLET TYPES M-1 & M-2
ADJACENT TO CONCRETE BARRIER

NO SCALE — MAY 1996

DES. W.W.S. (SUBMITTED) STATE ROAD & AIRPORT DESIGN ENGR.
DRW. L.G.S.
TRA. R.M.U. (APPROVED) CHIEF ENGINEER
CHK. R.K.C.

NUMBER 500IM
SHEET 2 OF 2

2/19/2008 1:23:51 PM \\GDOT-DSN1\GOPLOT\GCF\Road_Design_Tiff-18x12_to_Tiff-36x24.acf wnguyen C:\Documents and Settings\wnguyen\Desktop\M000416\Construction\Plan Sheet\M000(416)_0053.tif GO-RD-Plans-Review