STATE	PROJECT NUMBER	SHEET NO.	TOTAL SHEETS
GA.		31	43

NOTE: GLARE SCREEN WILL BE REQUIRED ONLY WHERE SPECIFIED. DETAILS SHOWN ON TYPE 20 BARRIER IS TYPICAL FOR ALL CONCRETE GLARE SCREENS. BOTTOM LONGITUDINAL BAR MAY BE OMITTED IF SCREEN IS NOT SLIP FORMED. JOINTS IN THE GLARE SCREEN SHALL MATCH THOSE IN THE BARRIER. TRANSITION FROM ONE SCREEN HEIGHT TO ANOTHER SHALL BE FROM ONE JOINT TO THE NEXT OR AS DIRECTED BY THE ENGINEER AND SHALL BE MEASURED FOR PAYMENT AS 2'-3" HEIGHT GLARE SCREEN. TOP OF 1'-6" HT. SCREEN MAY BE INCREASED TO 8⅔" WIDE AT CONTRACTOR'S OPTION.

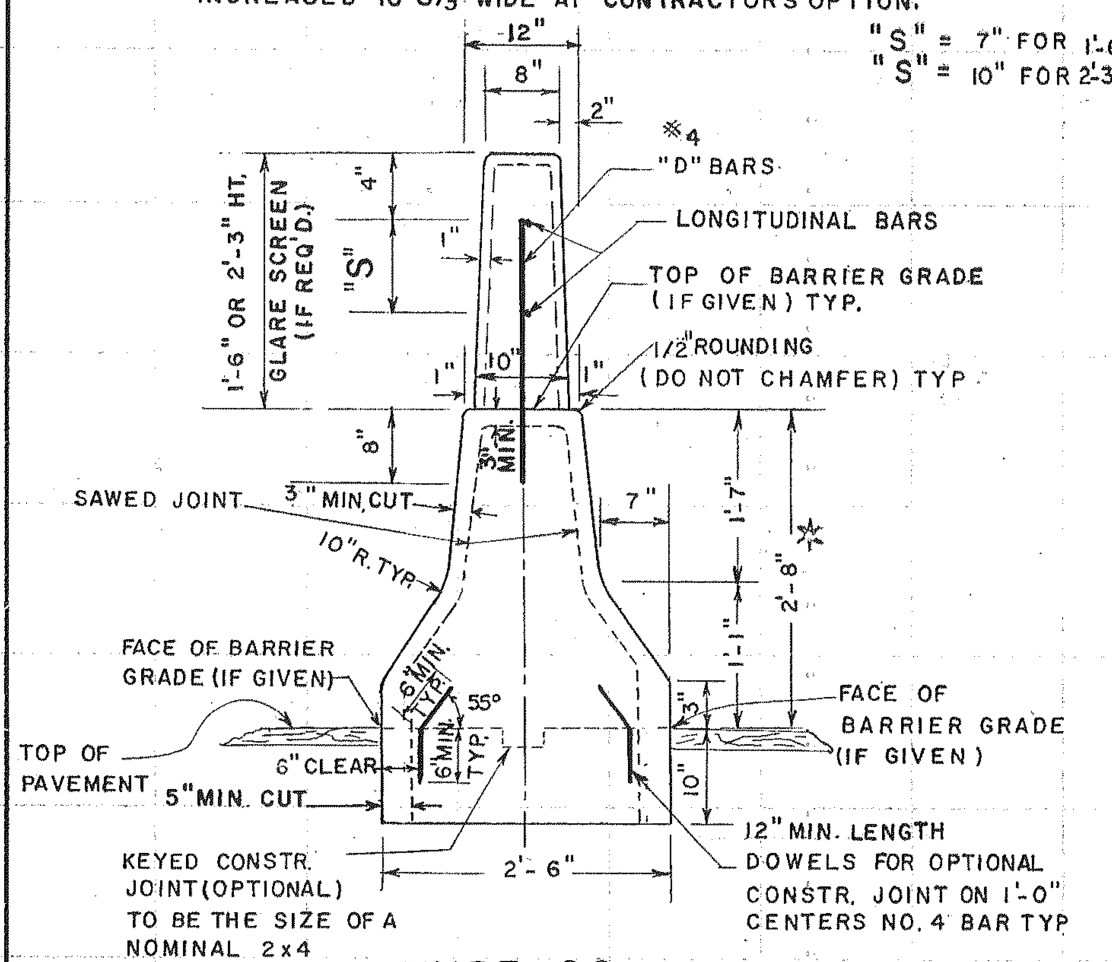

TYPE 20

(NORMAL SECTION, X = 0)

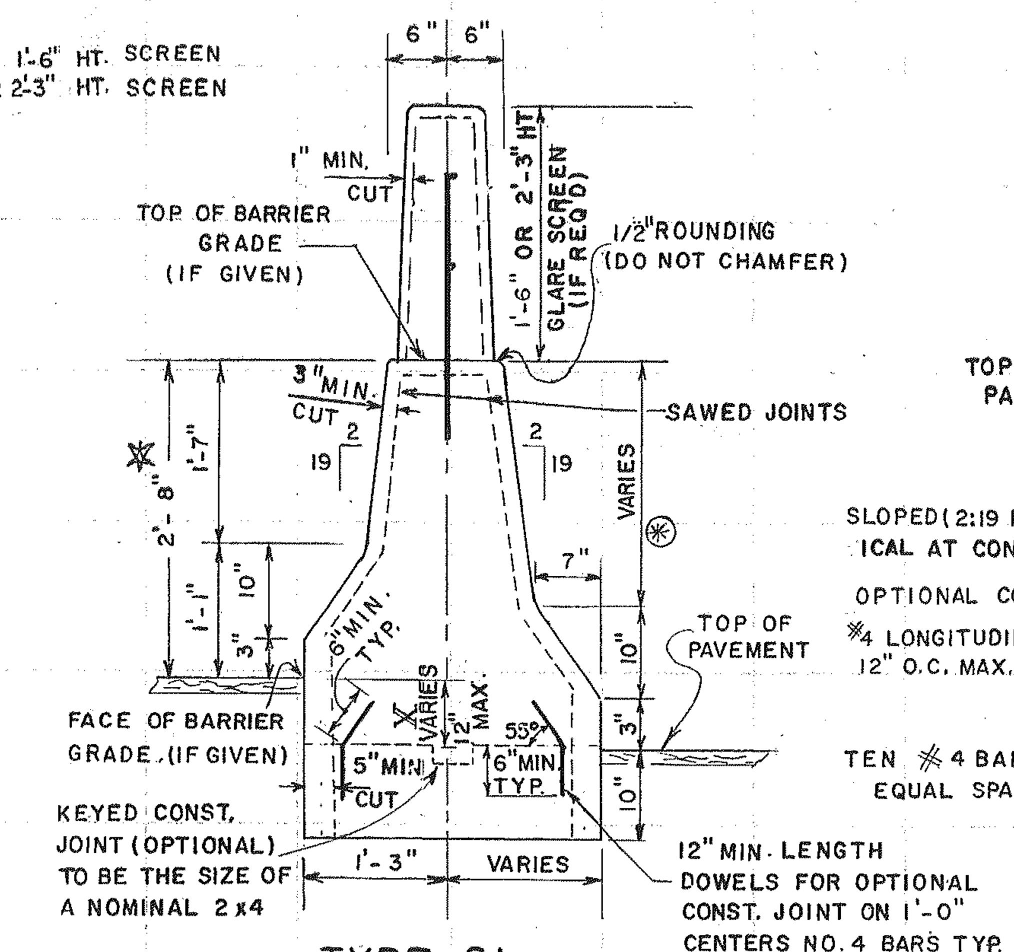

TYPE 21

(SUPERELEVATED SECTION OR INDEPENDENT GRADES, X = 0'-0"+ TO 1'-0" MAX.)

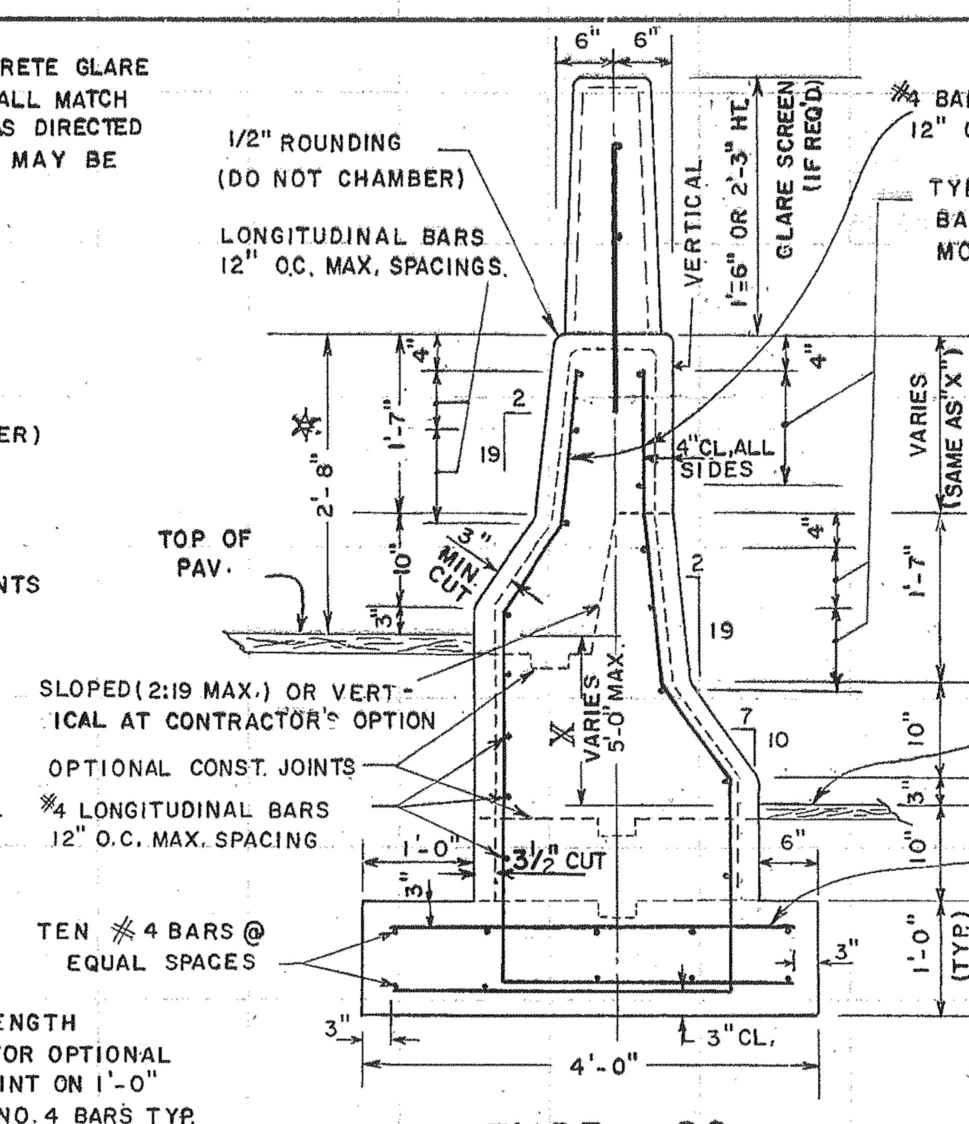

TYPE 22

(SUPERELEVATED SECTION OR INDEPENDENT GRADES X = 1'-0"+ TO 5'-0" MAX.)

ALTERNATE: WIRE FABRIC REINFORCING MAY BE USED INSTEAD OF SPECIFIED REBARS IF DETAILS ARE SUBMITTED TO & APPROVED BY THE GA. D.O.T. PRIOR TO USE.

NOTE: VARY NUMBER OF LONGITUDINAL BARS SUCH THAT VERTICAL SPACING DOES NOT EXCEED 12" EACH FACE.

NOTE: IF WELDING OPTION IS SELECTED THE BAR SIZE SHALL BE INCREASED ONE BAR SIZE.

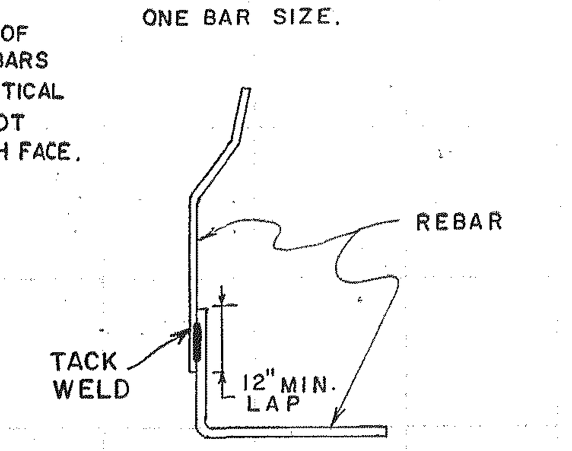

OPTIONAL WELDED BAR REINFORCEMENT SPLICE

NOTE: UNDERCUTTING OF BARS DUE TO WELDING SHALL BE BASIS FOR REJECTION

(*) THIS SIDE OF TYPE 21 BARRIER FACE MAY BE CONSTRUCTED AS SHOWN FOR TYPE 22 TO GIVE A CONSTANT 2'-6" BASE DEPTH.

** ALTERNATE: INSTEAD OF "D" BARS, #4 STRAIGHT DOWEL BARS SPACED AT 24" O.C. MAY BE USED. LENGTH OF DOWELS SHALL BE 4" GREATER THAN HEIGHT OF GLARE SCREEN.

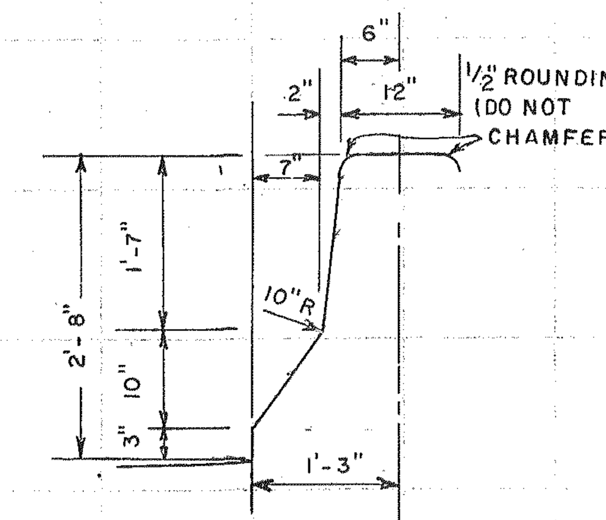

* BARRIER FACE DIMENSIONS

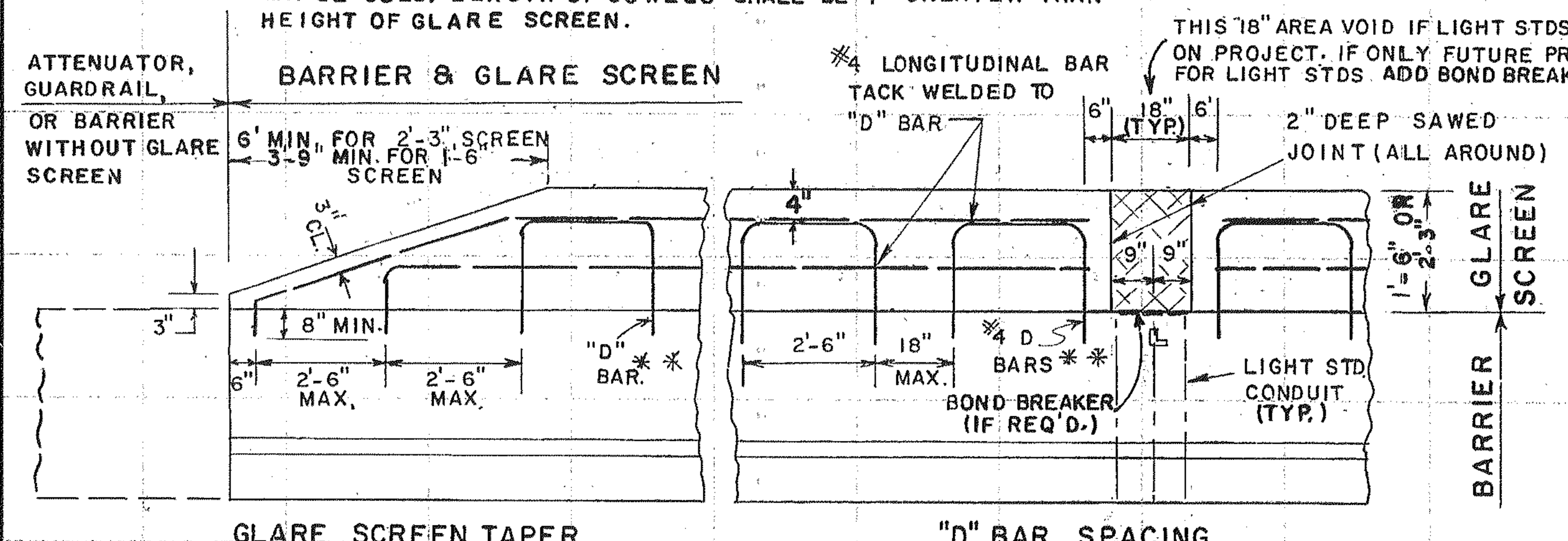

GLARE SCREEN TAPER

"D" BAR SPACING

NOTE: TAPER SHOWN ABOVE IS FOR USE ONLY WHERE SCREEN IS TERMINATED. DO NOT USE TAPER WHERE SCREEN IS INTERCEPTED BY PIER OR OTHER OBSTACLE. SEE SEPARATE PLANS FOR GLARE SCREEN AT PIERS OR WHERE BARRIER TOP WIDENS.

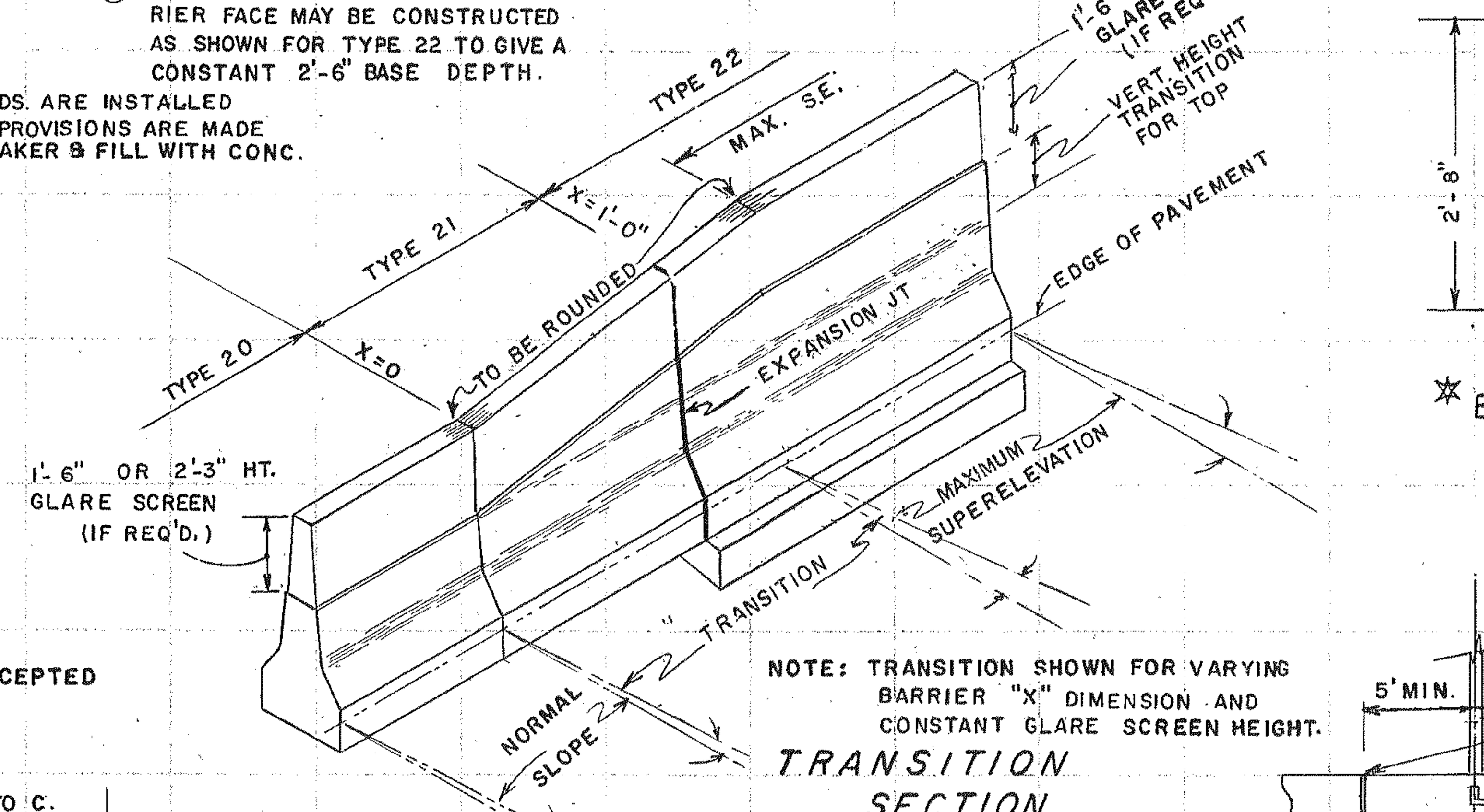

NOTE: TRANSITION SHOWN FOR VARYING BARRIER "X" DIMENSION AND CONSTANT GLARE SCREEN HEIGHT.

TRANSITION SECTION

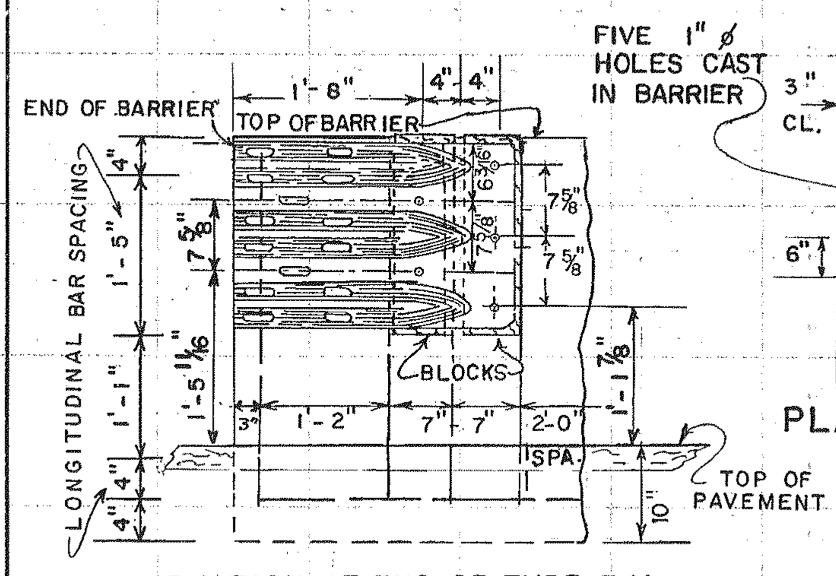

ELEVATION AT END OF TYPE 7-M

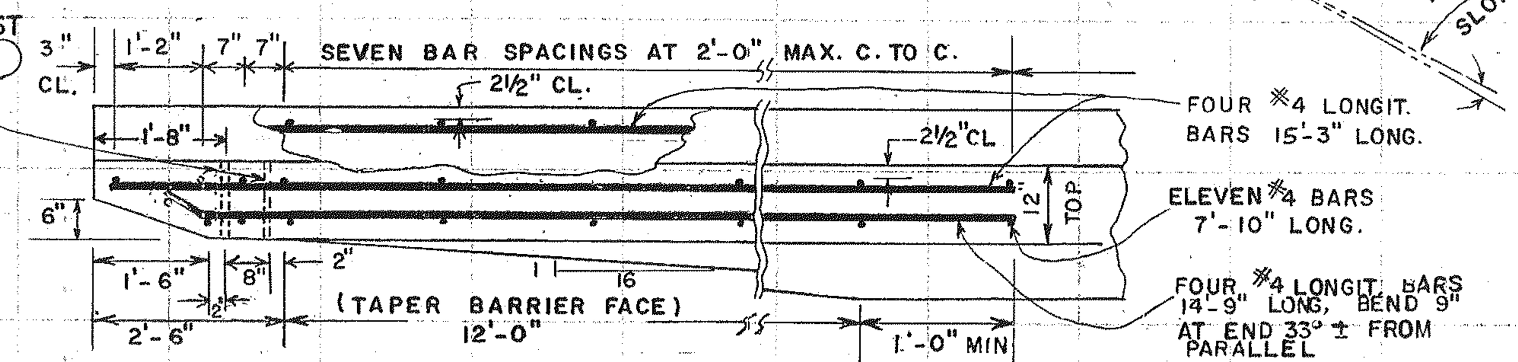

PLAN OF TYPE 7-M REINFORCING, TAPER AND DIMENSIONS

TOP HT. OF T BEAM GR. = 2'-7½"

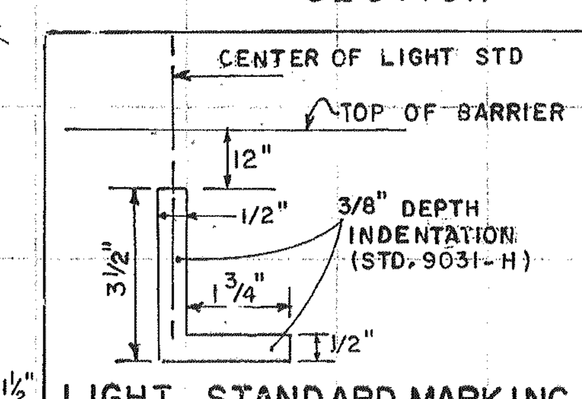

LIGHT STANDARD MARKING

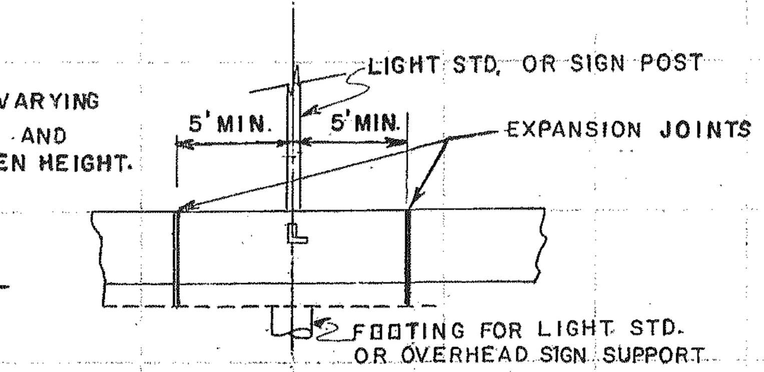

JOINT SPACING RIGID FOOTING LOCATIONS

NOTE: ADJUST EXPANSION JOINT SPACING SUCH THAT NEAREST JOINT IS 5 FT. FROM ℄ OF POSTS. (SEE GEN. NOTE NO. 4. A. 4.)

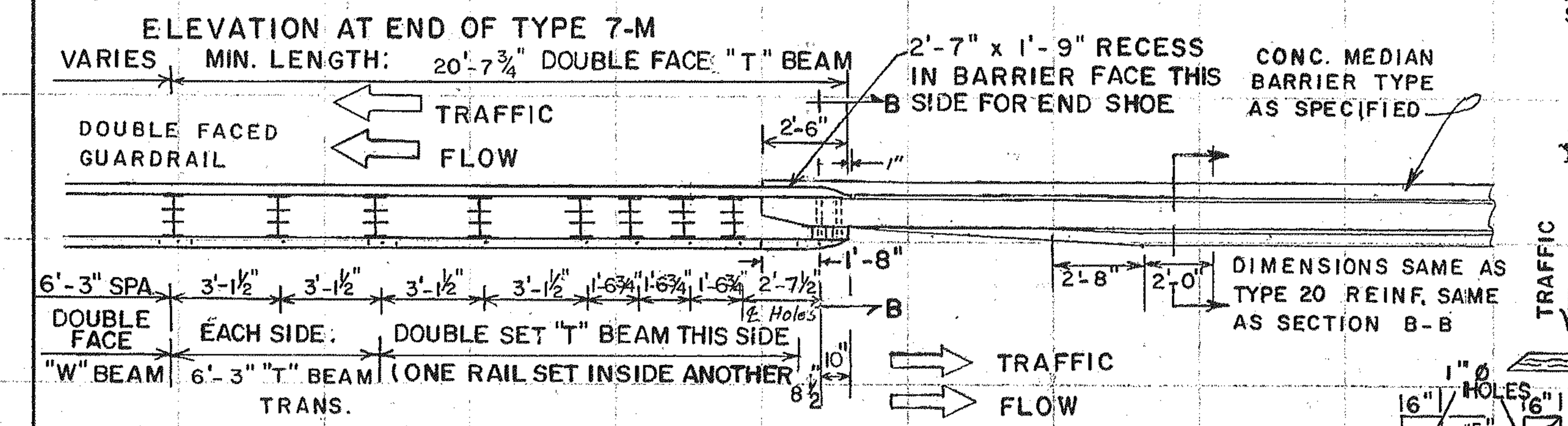

NOTE: TYPE 7-M BARRIER IS TO BE USED ONLY WHERE DOUBLE FACED GUARD RAIL IS WARRANTED AND FUTURE EXTENSION OF THE CONCRETE BARRIER IS NOT ANTICIPATED. PAYMENT FOR GUARDRAIL INCLUDES ADDITIONAL POSTS, END SHOES & CONNECTING HARDWARE & DOUBLE INSET RAIL.

PLAN VIEW - TYPE 7-M TO GUARDRAIL CONNECTION

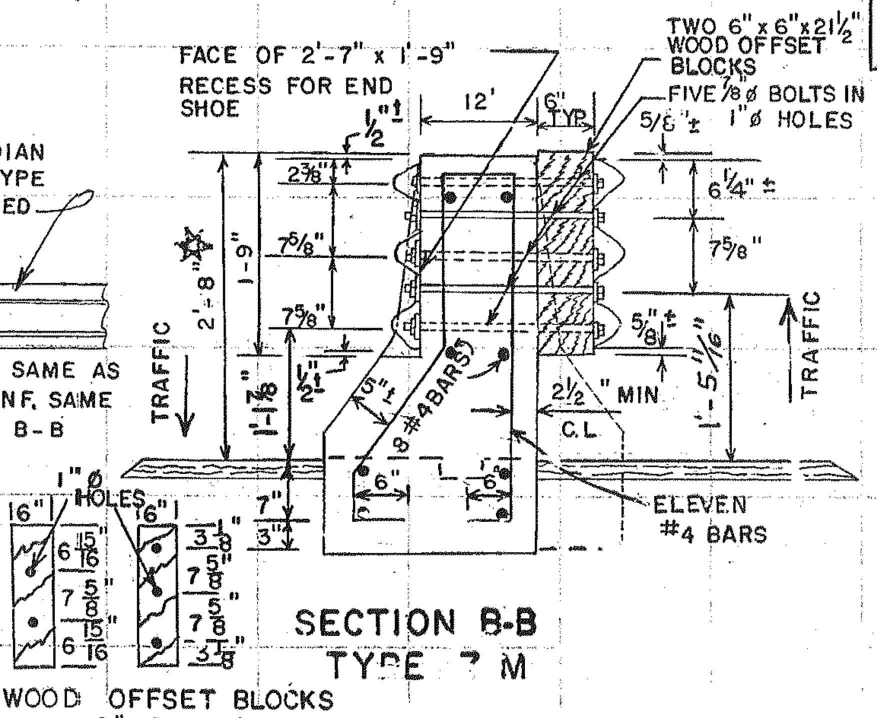

WOOD OFFSET BLOCKS (6" DEPTH)

SECTION B-B TYPE 7 M

NOTE: PAYMENT FOR GUARDRAIL SHALL INCLUDE ALL ADDITIONAL POSTS

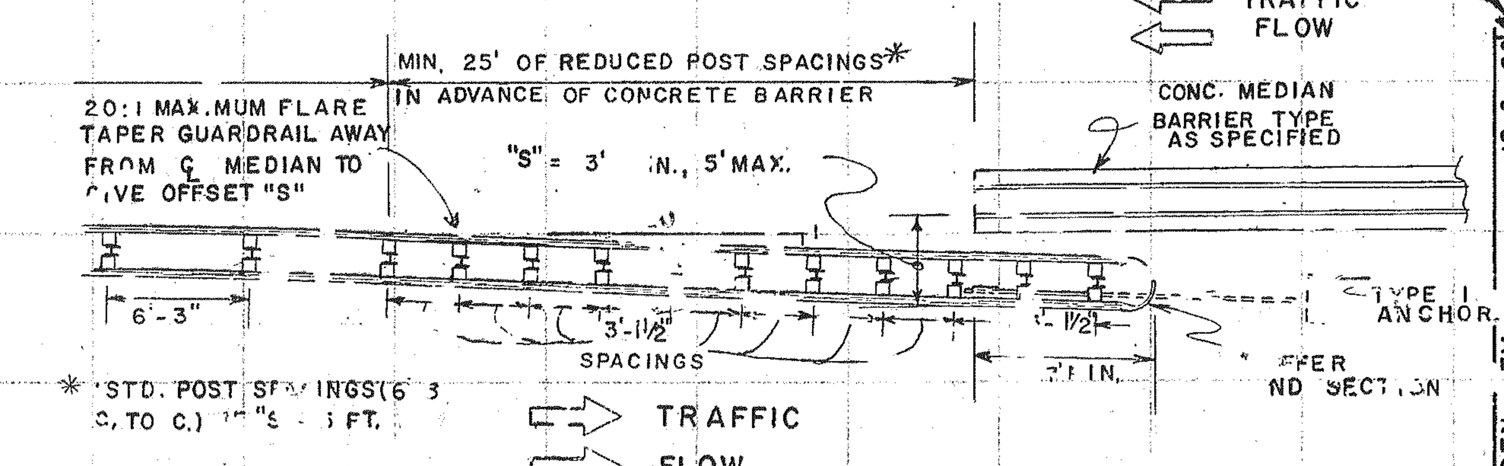

* STD. POST SPACINGS (6'-3" C. TO C.)

NOTE: DETAILS ABOVE ARE FOR USE ONLY WHERE DOUBLE FACED GUARDRAIL IS WARRANTED AND FUTURE EXTENSION OF THE CONCRETE MEDIAN BARRIER IS ANTICIPATED.

PLAN VIEW - ENDING DOUBLE FACED GUARDRAIL AT BARRIER

GENERAL NOTES:

1. SPECIFICATIONS: GEORGIA STANDARD CURRENT EDITION, AND SUPPLEMENTS THERETO.
2. ALL CONCRETE SHALL BE CLASS "A". SURFACE FINISHES REQUIRED ONLY WHERE SPECIFIED. SEE SECTION 500.
3. CONSTRUCTION TOLERANCE - THE TOP SURFACE SHALL BE CHECKED FOR GRADE AND ALIGNMENT AND ANY VARIATION FROM THE ESTABLISHED LINE AND GRADE, GREATER THAN 1/8" IN 10'-0", WHEN CHECKED WITH A STRAIGHT EDGE OF NOT LESS THAN 10'-0" IN LENGTH, SHALL BE REMOVED AND RESET AS DIRECTED BY THE ENGINEER.
4. CONSTRUCTION METHOD -
   A. CAST-IN-PLACE (RIGID FORMS)
      1. THE MEDIAN BARRIER SHALL HAVE A BASE OF GRADED AGGREGATE, COMPACTED TO 100 PERCENT OF THE MAXIMUM LABORATORY DRY DENSITY, PLACED ON A SUB-GRADE CONSTRUCTED BY NORMAL HIGHWAY PROCEDURES AND CRITERIA. SEE TYPICAL SECTION.
      2. FORMS SHALL BE SO CONSTRUCTED AND ANCHORED AS NOT TO "FLOAT UP" OR BE DISPLACED DURING CONSTRUCTION AND THE LINE AND GRADE ESTABLISHED SHALL BE MET WITHIN TOLERANCES SPECIFIED.
      3. EXPANSION JOINTS ARE REQUIRED IN ALL BARRIER TYPES AT A MAXIMUM SPACING OF 400 FEET. A 1" PREFORMED JOINT FILLER SHALL BE USED AT THE EXPANSION JOINTS. CONTRACTION JOINTS SHALL BE PLACED AT EVERY 20'. CONTRACTION JOINTS MAY BE SAWED. IF SAWED JOINTS ARE USED, THEY SHALL BE 1/4" WIDE AND TO THE DEPTH SHOWN IN THE DETAILS.
      4. NO JOINT SHALL BE CLOSER TO A LIGHT STANDARD OR SIGN POST THAN 5'±. JOINTS SHALL BE EQUALLY SPACED ABOUT THE LIGHT STANDARD OR SIGN POST CENTERLINE. ADJUST ADJACENT JOINTS TO A BALANCED SPACING FOR A PLEASING APPEARANCE. AN EXPANSION JOINT IS REQUIRED 5 FT± EACH SIDE OF EACH LIGHT STANDARD.
      5. CAST IN PLACE MEDIAN BARRIER MAY BE CONSTRUCTED IN MORE THAN ONE POUR. THIS METHOD WILL REQUIRE KEYED CONSTRUCTION JOINTS AS SHOWN. OTHER CONSTRUCTION JOINTS MAY BE APPROVED BY THE ENGINEER.
   B. CAST-IN-PLACE (SLIP FORM):
      1. NOTES 4A.1, 4.A.3, 4A.4, AND 4.A.5 SHALL APPLY TO THE SLIP FORM METHOD OF CONSTRUCTION
5. REINFORCEMENT STEEL, WHERE REQUIRED
   A. BARRIER: ALL LONGITUDINAL STEEL SHALL BE CONTINUOUS EXCEPT: REQUIRED STOPS AT EXPANSION JOINTS; AND OPTIONAL STOPS NOT CLOSER THAN 100 FT. AT SELECTED CONTRA. JTS.
   B. GLARE SCREEN: ALL LONGITUDINAL REINFORCING STEEL TO BE NO. 4 BARS CONTINUOUS THROUGHOUT THE FULL LENGTH OF THE GLARE SCREEN, EXCEPT ACROSS EXPANSION JOINTS, THROUGH LIGHT STANDARDS AND SIGN POSTS.
   C. LONGITUDINAL OR VERT. REINF. MAY BE LAP SPLICED 1'-6" AS APPROVED BY THE ENGINEE.
6. ALL GLARE SCREENS REQUIRE #4 VERTICAL BARS FIRMLY BONDED INTO BARRIER TOP. VERTICAL BARS MAY BE "D" BARS AT 18" MAX. SPACINGS OR STRAIGHT DOWELS AT 24" MAX. SPACINGS. VERTICAL BARS WILL BE EQUALLY SPACED BETWEEN JOINTS. DRILLING IS REQ'D. IN EXIST. BARRIERS.
7. TYPE 21 BARRIER SHALL BE USED WHERE TRANSITIONING FROM A TYPE 20 TO A TYPE 22. FOR SUCH A TRANSITION THE TYPE 21 BARRIER FACE INDICATED BY (*) WILL BE CONSTRUCTED AS SHOWN FOR THE TYPE 22 TO PROVIDE A CONSTANT BASE WIDTH OF 2'-6".
8. IF OVERHEAD SIGN SUPPORTS ARE TO BE PLACED ON TOP OF THE BARRIER, THE FOOTING SHALL BE INCORPORATED AS AN INTEGRAL PART OF THE BARRIER. THE DESIGN OF THE SIGN SUPPORT FOOTING SHALL BE DESIGNED BY THE CONTRACTOR & APPROVED BY THE DEPT OF TRANSPORTATION PRIOR TO THE START OF CONSTRUCTION. SEE SEPARATE PLAN DETAILS FOR TYPE 26 CONCRETE BARRIER WHERE REQUIRED.
9. IF LIGHT STANDARDS ARE TO BE PLACED ON TOP OF THE MEDIAN BARRIER, THEIR FOOTING SHALL BE INCORPORATED AS AN INTEGRAL PART OF THE BARRIER. SEE THE APPROPRIATE CONSTRUCTION DETAIL SHEETS FOR ADDITIONAL INFORMATION. THE COST OF THE FOOTING AND OTHER NECESSARY MATERIALS TO BUILD THE FOOTING UP TO THE TOP OF THE BARRIER SHALL BE INCLUDED IN THE OVERALL BID FOR THE MEDIAN BARRIER.
10. SEE SEPARATE PLANS FOR LIGHT STANDARDS OR OVERHEAD SIGNS (IF APPLICABLE).
11. CENTERLINE STATIONS SHALL BE CAST INTO THE SLOPING FACE ON BOTH SIDES, OF THE BARRIER 8" ABOVE THE PAVEMENT SURFACE IN ACCORDANCE WITH GA. STD. 9031-H. EACH SIDE OF CONCRETE BARRIER AT CENTER OF LIGHT STANDARD SHALL BE MARKED WITH THE LETTER "L" AS SHOWN 12" FROM BARRIER TOP.
12. CONC. GLARE SCREEN SHALL BE PLACED ON BARRIER AS SPECIFIED ON THE PLANS. COST OF GLARE SHALL BE PAID FOR AS "CONC. GLARE SCREEN - (HEIGHT) - LIN. FT."

BARRIER TYPE	DIMENSION X	BASIS OF PAYMENT
20	0'-0"	CONCRETE BARRIER, TYPE 20 - LIN. FT.
21	0'-0" TO 1'-0"	CONCRETE BARRIER, TYPE 21 - LIN. FT.
22	1'-0" TO 5'-0"	CONCRETE BARRIER, TYPE 22 - LIN. FT.
7-M	0'-0"	CONCRETE BARRIER TYPE 7-M - LIN. FT.

BY	REVISIONS	DATE
R.N.	GEN. REV.	12-6-88
R.M.	SAW'D JT. DEPTH	6-11-84
R.M.U.	Rev. Glare Screen Notes	3-16-81
R.	[illegible] AT JT. SPA.	3-14-83
R.M.U.	REV. GEN. NOTE 2	11-1-83
R.M.U.	JT. SPA. AT LIGHT STD	4-11-84

DEPARTMENT OF TRANSPORTATION

STATE OF GEORGIA

STANDARD

TYPES 20, 21, 22 AND 7-M

CONCRETE BARRIER - PERMANENT

AND CONCRETE GLARE SCREEN

NO SCALE — SEPTEMBER, 1980

DES. W.W.S. T.L.T. — DRW. R.M.U. S.C.B. — TRA. G.M.E.

(SUBMITTED) Floyd E. Hardy — STATE ROAD & AIRPORT DESIGN ENGR.

(APPROVED) Thomas D. Moreland — STATE HIGHWAY ENGINEER

NUMBER 4940

FORM EF3

2/19/2008 1:24:06 PM \\GDOT-DSN1\GOPLOT\QCF\Road Design Tiff-18x12 to Tiff-36x24.qcf wnguyen C:\Documents and Settings\wnguyen\Desktop\M000416\Construction\Plan Sheet\M000(416) 0048.tif GO-RD-Plans-Review