ue Dec 21 09:39:34 1999 \\GDOT_CO_SV20\OCF\OSD_Mular.acf posta M:\David\submitted\401a.prf

STATE	PROJECT NUMBER	SHEET NO.	TOTAL SHEETS
GA.		24	43

TYPE A WOOD POST (FOR "W" BEAM GUARDRAIL)

NOTE: WOOD POST ARE ALLOWABLE ONLY WHERE SPECIFIED.

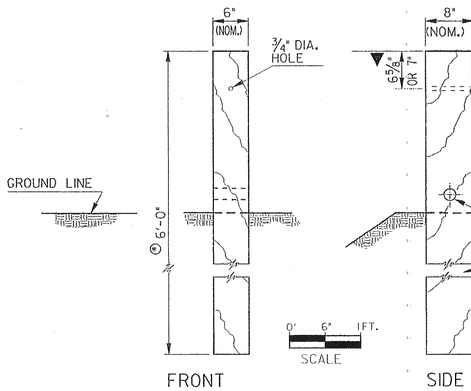

⊙ SEE SEPARATE STANDARD OR DETAIL FOR POSTS IN TUBE SLEEVE.

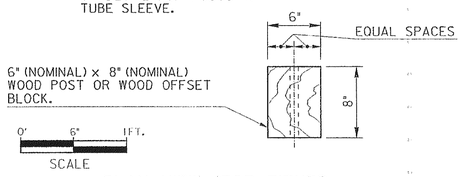

PLAN VIEW (FOR EITHER "W" BEAM OR "T" BEAM POST OR BLOCK)

WOOD POSTS AND WOOD OFFSET BLOCKS MAY BE ROUGH OR SURFACED.

DIMENSIONS FOR WOOD POSTS AND WOOD OFFSET BLOCKS ARE NOMINAL IN ACCORDANCE WITH ACCEPTED LUMBER INDUSTRY STANDARDS.

TYPE D STEEL POST (FOR "W" BEAM GUARDRAIL)

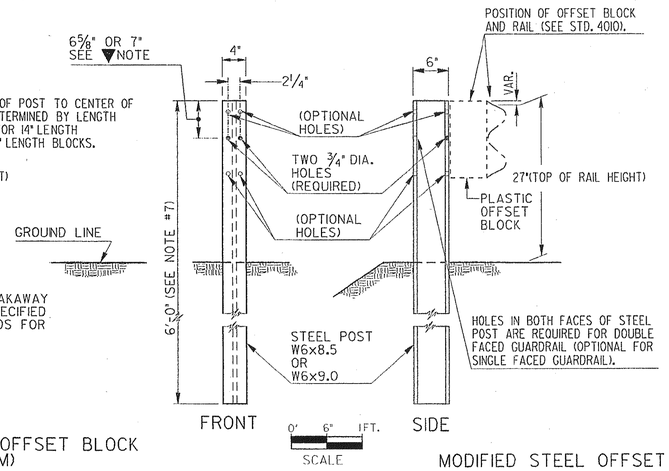

TYPE D-T STEEL POST (FOR "T" BEAM GUARDRAIL)

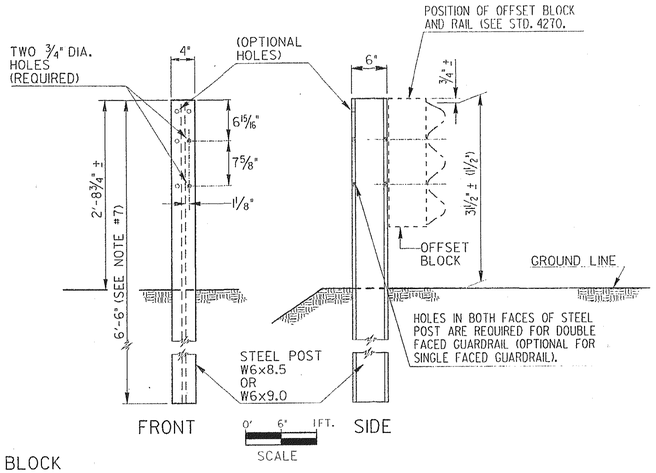

6" DEPTH* STEEL OFFSET BLOCK ("T" BEAM)

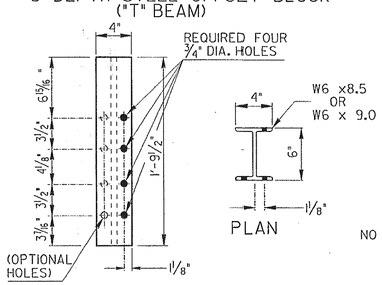

NO SCALE

*6" DEPTH STEEL OFFSET BLOCK PERMITTED ONLY FOR LOW SPEEDS. SEE NOTE 5(b).

MODIFIED STEEL OFFSET BLOCK FOR " T " BEAM GUARDRAIL

NOTE: MODIFIED STEEL OFFSET BLOCKS ARE USED ONLY WHERE SPECIFIED SEE NOTE 5(c)

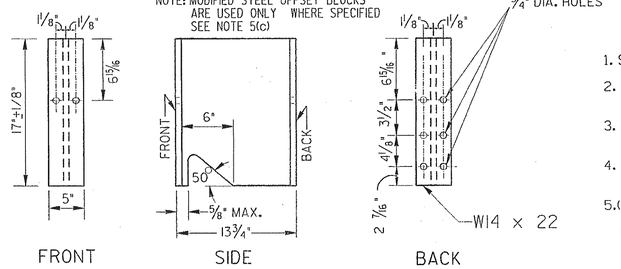

GENERAL NOTES:

1. SPECIFICATIONS GEORGIA STANDARD, CURRENT EDITION AND SUPPLEMENTS THERETO.
2. STEEL POSTS MAY BE EITHER ROLLED OR WELDED STRUCTURAL SHAPES. STEEL OFFSET BLOCKS SHALL BE ROLLED. WELDED POSTS SHALL BE SEAL WELDED BETWEEN WEB AND FLANGE BEFORE GALVANIZING.
3. WHERE WOOD POST OR WOOD OFFSET BLOCKS ARE PERMITTED, THE WOOD SHALL BE TREATED IN ACCORDANCE WITH GEORGIA STANDARD SPECIFICATIONS.
4. ALL BOLTS USED FOR FASTENING THE RAIL AND OFFSET BLOCKS TO WOOD POSTS SHALL HAVE SUFFICIENT LENGTH TO EXTEND AT LEAST 1/4" BEYOND THE FULL NUT, UP TO 3"(+-) BEYOND.
5. (a) "W" BEAM GUARDRAIL: ALL OFFSET BLOCKS SHALL BE 8" DEPTH PLASTIC BLOCKS EXCEPT FOR (d) BELOW.
   (b) "T" BEAM GUARDRAIL: STANDARD INSTALLATION WILL UTILIZE 8" DEPTH PLASTIC BLOCKS, HOWEVER FOR DESIGN SPEEDS OF 45 MPH OR LESS, 6" DEPTH STEEL OFFSET BLOCKS MAY BE ALLOWED INSTEAD.
   (c) 13 3/4" DEPTH MODIFIED STEEL OFFSETS MAY BE SPECIFIED WHERE JUSTIFIED FOR MORE SEVERE CONDITIONS. PAY ITEM IS -GUARDRAIL, TP T, MODIFIED OFFSET BLOCK---PER LIN. FT.
   (d) WOOD OFFSET BLOCKS MAY BE USED ONLY AT AN ISOLATED LOCATION WITHIN A RUN OF GUARDRAIL, WHERE OTHER BLOCK TYPES WOULD NOT PROVIDE PROPER FIT, AS DETERMINED BY THE ENGINEER OR SHOWN IN THE PLANS.
6. POSTS WILL BE SPACED AT 6'-3" C. TO C., UNLESS OTHERWISE NOTED.
7. ADDITIONAL LENGTH POSTS, WHERE SPECIFIED, SHALL BE 7'-0" AND 7'-6" LONG FOR "W" BEAM AND "T" BEAM GUARDRAILS RESPECTIVELY, WITH HOLES DIMENSIONED FROM THE POST-TOP THE SAME AS SHOWN.

BACK-UP PLATE (FOR "T" BEAM GUARDRAIL)

NOTE:
BACK-UP PLATES ARE REQUIRED WITH ALL STEEL OFFSET BLOCKS EXCEPT AT RAIL SPLICES OR WHERE ONE RAIL SECTION IS NESTED INSIDE ANOTHER RAIL SECTION. BACK-UP PLATE WILL BE LOCATED BACK OF RAIL ADJACENT TO OFFSET BLOCKS (INSIDE MAIN RAIL).

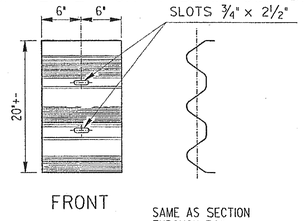

HEIGHT CORRECTION IF NEEDED FOR RESURFACED PROJECTS

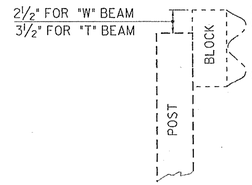

STEPS:
(a) REMOVE OFFSET BLOCKS FROM POSTS.
(b) ELEVATE BLOCK TO PROVIDE REQ'D. RAIL HEIGHT AND RECONNECT WITH 2 BOLTS THRU SAME HOLES IN POST TO THE LOWER HOLES IN OFFSET BLOCKS.

NOTE:
WHERE WOOD OFFSET BLOCK ON STEEL POST IS PERMITTED IN "W" BEAM INSTALLATION, A NAIL OR SCREW FROM POST TO WOOD IS REQUIRED TO PREVENT ROTATION OF THE BLOCK.

WOOD OFFSET BLOCKS
(WHERE PERMITTED, SEE NOTE 5(d))

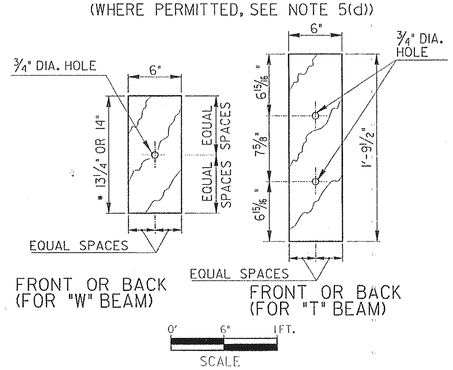

(PLAN VIEW IS SAME AS SHOWN FOR WOOD POST ABOVE)

STANDARD PLASTIC OFFSET BLOCKS

NOTE: PLASTIC OFFSET BLOCKS SHALL BE OF TYPE LISTED IN GA. DOT OPL OF APPROVED PRODUCTS OR PER STANDARD SPECIFICATIONS.

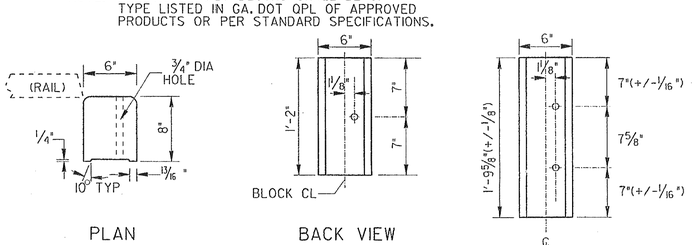

NO SCALE

NOTE:
DIMENSIONS ARE SUBJECT TO MANUFACTURER'S TOLERANCES.

CONCRETE FOUNDATION FOR POST IN SHALLOW FILLS OVER CULVERTS OR OTHER OBSTRUCTIONS

(NOTE: PLATE MOUNTED POST MAY BE USED AS AN ALTERNATE, SEE SEPARATE SHEET).

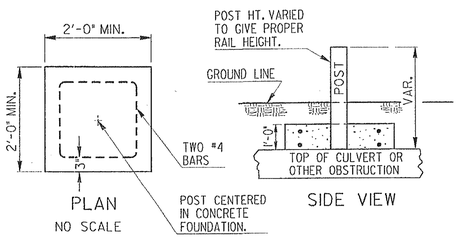

STEEL POST TO BE PLUMBED AND FOUNDATION CONCRETE POURED ABOUT SAME TO FINISHED ELEVATION.

PAYMENT FOR GUARDRAIL TO INCLUDE ALL EXTRA WORK AND MATERIALS INCLUDING CONCRETE (CL. A OR CL. B) AND NO. 4 BARS.

IF OFFSET FROM RAIL FACE TO HEADWALL IS LESS THAN 4'-3", POST SPACINGS ARE REDUCED TO 3'-1/2" C.C. ACROSS THE CULVERT WITH 7 SUCH SPACINGS IN ADVANCE AT NO ADDITIONAL PAYMENT.

NOTE: ADDITIONAL DEPTH OFFSETS BELOW ARE SHOWN FOR "W" BEAM. SIMILAR OFFSETS MAY BE APPLIED FOR "T" BEAM GUARDRAIL.

NOTE: ADDITIONAL DEPTH OFFSETS ARE PERMITTED ONLY WHERE AN ISOLATED POST MUST BE PLACED AT A GREATER THAN NORMAL OFFSET.

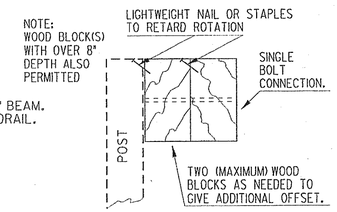

NOTE: FOR BLOCK CONNECTION TO POST AND TO RAIL SEE STD. 4010(OR 4270).

ADDITIONAL DEPTH OFFSET BLOCKOUTS
(FOR USE WHERE GREATER THAN STANDARD OFFSET IS SPECIFIED)

REVISION	BY	DATE

DEPARTMENT OF TRANSPORTATION
STATE OF GEORGIA

STANDARD POSTS AND OFFSET BLOCKS FOR "W" & "T" BEAM GUARDRAIL

(REPLACES STANDARDS 401i & 427I)

SCALE: AS SHOWN — REVISED & REDRAWN DEC., 1999

(SUBMITTED) James A. Bennett
STATE ROAD & AIRPORT DESIGN ENGINEER
(APPROVED) Paul L. Liddell
CHIEF ENGINEER

NUMBER 401IA

2/19/2008 1:24:25 PM \\GDOT-DSN1\GOPLOT\OCF\Road_Design_Tiff-18x12-to_Tiff-36x24.acf wnguyen C:\Documents and Settings\wnguyen\Desktop\M000416\Construction\Plan Sheet\M000(416)_0041.tif GO-RD-Plans-Review