STATE	PROJECT NUMBER	SHEET NO.	TOTAL SHEETS
GA.	NHS-M000-00(416)	4	43

TYPICAL SECTION

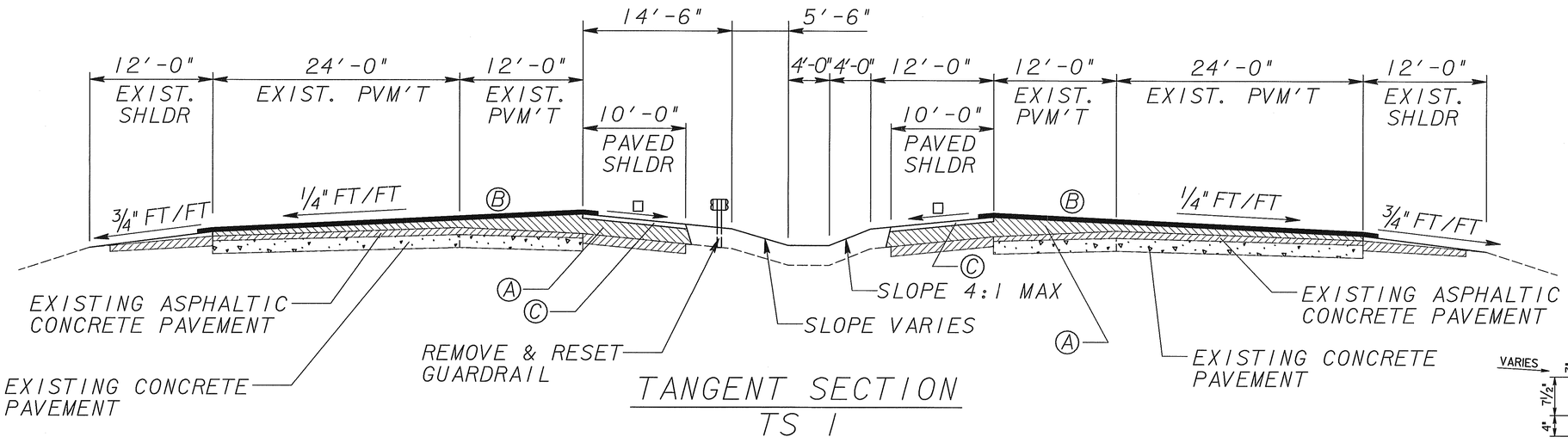

TANGENT SECTION
TS 1

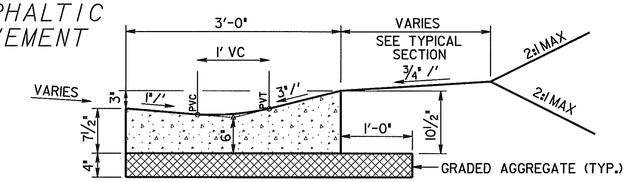

1 CONCRETE SHALL BE CLASS "A", OR PER SECTION 441.
2 BASIS OF PAYMENT : CONCRETE "V" GUTTER PER LIN. FT.

SPECIAL DESIGN
"V" GUTTER DETAILS

△ SLOPE 3/4" / 1'-0" OR RATE OF S.E. WHICHEVER IS GREATER

□ SLOPE AS FOLLOWS:
- S.E. RATE OF 0.03'/FT OR LESS USE 1/2" IN 1'-0"
- S.E. RATE OF 0.04'/FT, USE 3/8" IN 1'-0"
- S.E. RATE OF 0.05'/FT, USE 1/4" IN 1'-0"
- S.E. RATE OF 0.06'/FT, USE 1/8" IN 1'-0"
- S.E. RATE OF 0.08'/FT, USE +0.01'/FT

ALGEBRAIC DIFFERENCE IN PAVING AND SHOULDER SLOPES NOT TO EXCEED 0.07'/FT

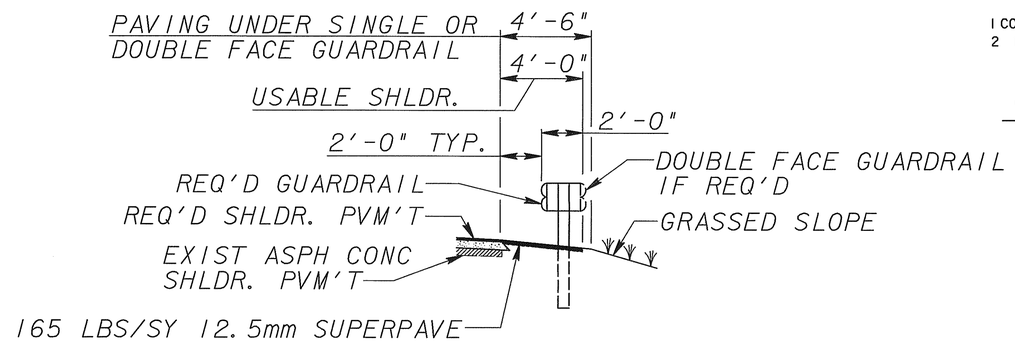

DETAILS FOR LOCATION OF DOUBLE FACE GUARDRAIL IN MEDIAN

NOTE :
ON GUTTER LENGTH THAT DOES NOT ALLOW A 3" MINIMUM DEPTH FOR NEW GUTTER, THE OLD "V" GUTTER SHALL BE REMOVED AND REPLACED. COST OF DOWELING AND DOWELS SHALL BE INCLUDED IN COST BID FOR "V" GUTTER.

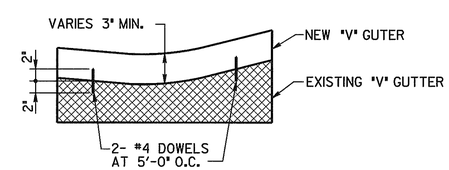

SPECIAL "V" GUTTER DETAILS

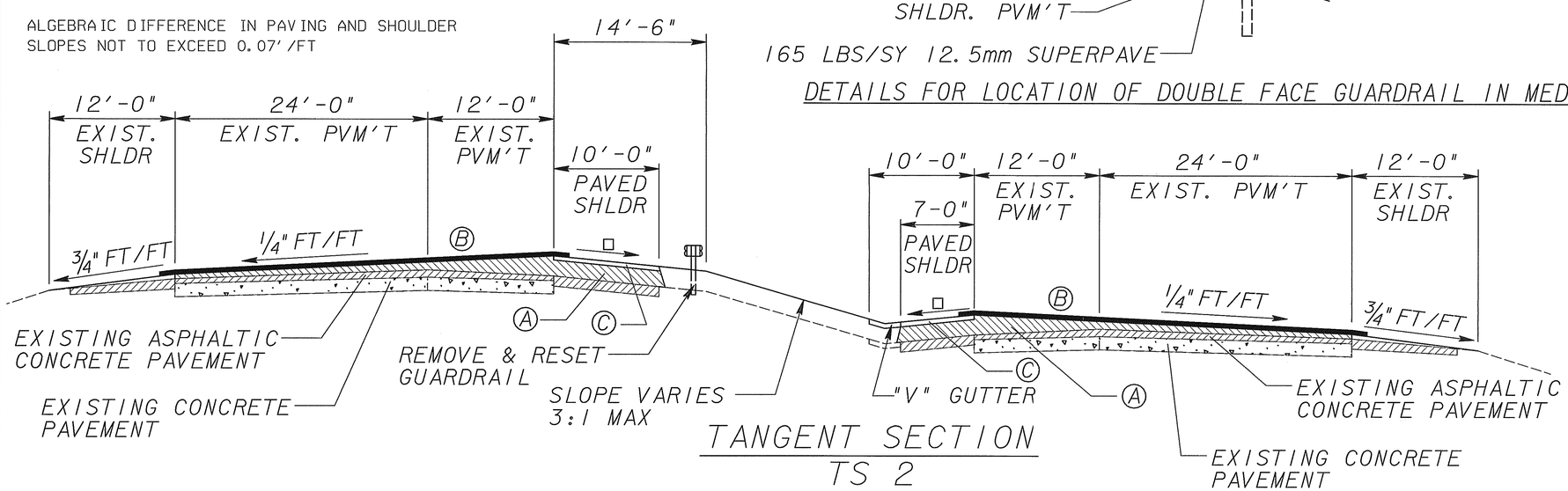

TANGENT SECTION
TS 2

(A) 19 mm SUPERPAVE (VARIABLE DEPTH TO MEET CROSS SLOPE)

(B) 90 LBS/SY 12.5 mm OGFC

(C) 165 LBS/SY 12.5 mm SUPERPAVE

ASPHALT: DESIGN LEVEL D

SHOWDATETIME$$$$$$
DGN$SPECIFICATION$$$$$$$$$$$$$$$$$$$$$$$$

K:\TRA\GDOTMAINT*4\CT*8\DGN\RDY\LTRTYP.DGN 3-27-01 GKS

2/19/2008 1:26:04 PM \\GDOT-DSN1\GOPLOT\OCF\Road_Design_Tiff_18x12_to_Tiff_36x24.gcf wnguyen C:\Documents and Settings\wnguyen\Desktop\M000416\Construction\Plan Sheet\M000(416)_0006.tif GO-RD-Plans-Review