STATE	PROJECT NUMBER	SHEET NO.	TOTAL SHEETS
GA.	STP00-0000-00(355)	44	83

NOTE:

SEE STANDARD 1019-A- BRICK DROP INLETS- FOR DETAIL OF GRATING FRAME,HOOD,ETC., WHERE NEEDED.

TYPE "A"

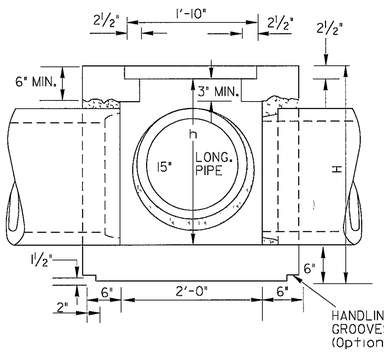

TYPE "B" WITH WEIR

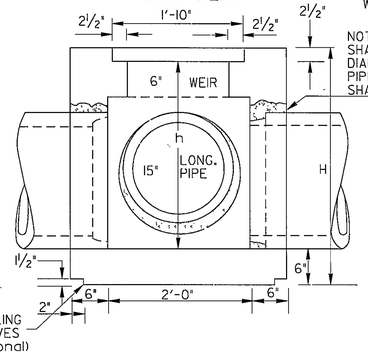

NOTE: OPENING FOR PIPE SHALL BE THE OUTSIDE DIAMETER OF THE REQ'D PIPE PLUS 1" MIN..OPENING SHALL HAVE CORRUGATIONS

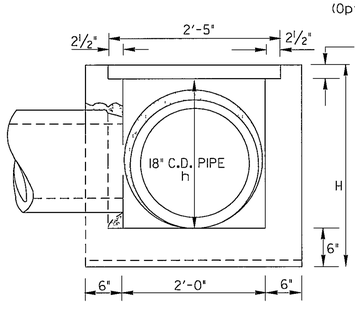

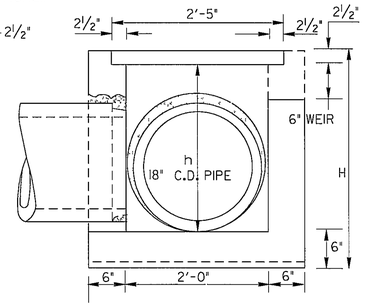

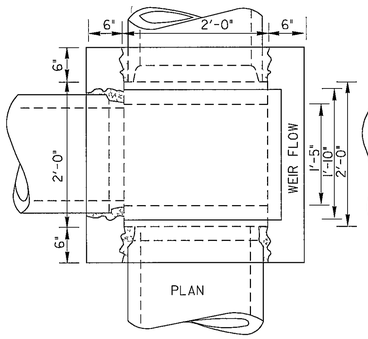

SCALE: 1" =1'

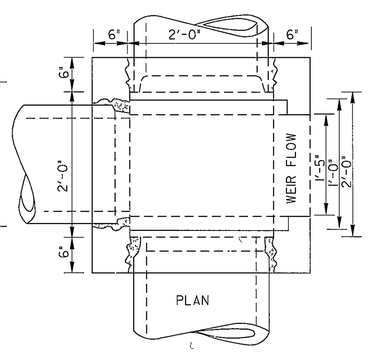

SCALE: 1" =1'

TYPE "C" (WITH OR WITHOUT WEIR)

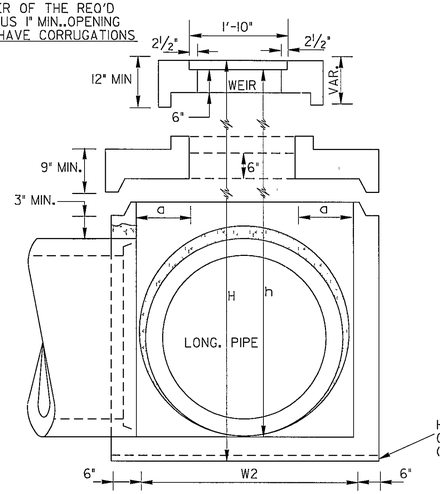

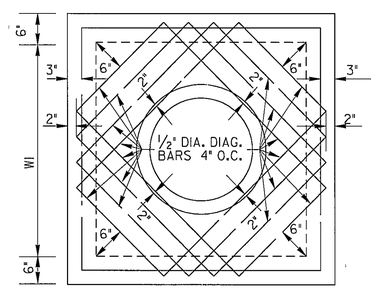

SCALE: ¾" =1

FOR OTHER DETAILS, SEE TYPE "B"

TYPE "E"

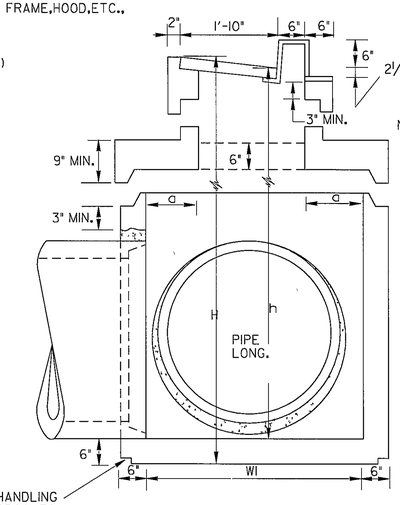

HANDLING GROOVES (Optional)

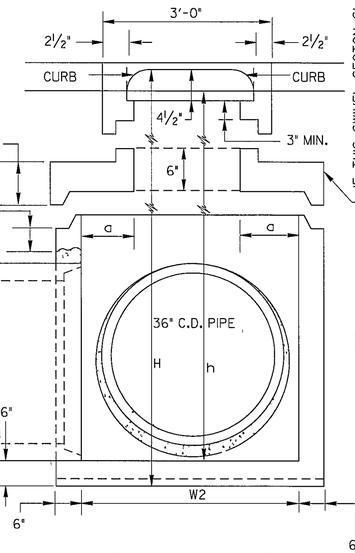

IF THIS SWIVEL SECTION SLAB IS USED TO REDUCE THE W OR W1DIMENSIONS, INCREASE THE MIN. THICKNESS TO 9" AND USE REINF. STEEL SHOWN UNDER TYPE "C"

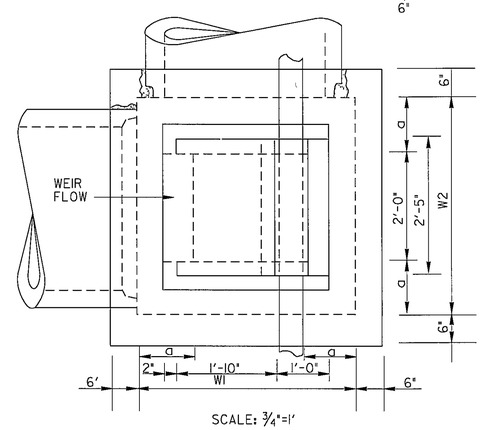

SCALE: ¾"=1'

ISOMETRIC VIEW OF DROP INLET TYPE "C" OR "E" FOR PIPES LARGER THAN 18"(WITH OR WITHOUT WEIR)

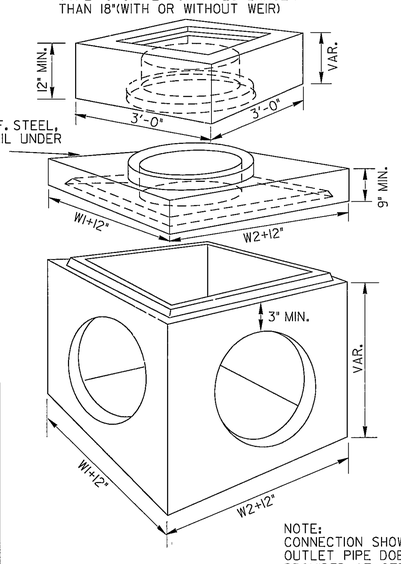

NOTE:
FOR REINF. STEEL, SEE DETAIL UNDER TYPE "C"

NOTE:
CONNECTION SHOWN ABOVE FOR USE WHERE CONCRETE OUTLET PIPE DOES NOT HAVE BELL OR HUB END PROVIDED AT STRUCTURE OUTLET.

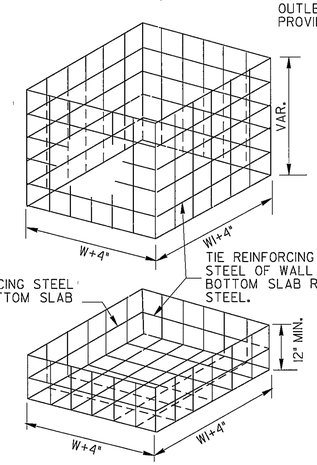

METHOD OF CONNECTING PIPE

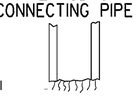

STEP 1

CUT CONCRETE PIPE LEAVING APPROXIMATELY 3" OF REINFORCING MESH EXPOSED.

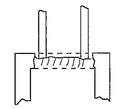

STEP 2

POSITION PIPE APPROXIMATELY 3" INTO OPENING OF WALL.

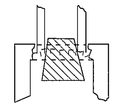

STEP 3

POSITION CONICAL CORE INSIDE OF PIPE AND SEAL WITH GROUT (1/2" MIN. THICKNESS OF GROUT). REMOVE CORE WHEN SET AND RUB GROUT TO SEAL JOINTS.

ALTERNATE METHOD OF CONNECTION SKEWED PIPE

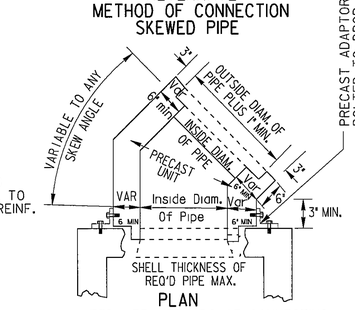

PRECAST ADAPTOR MAY BE BOLTED TO DROP INLET WITH 2- 1/4" x 3" ANGLE IRON.

PLAN

ALTERNATE METHODS OF CONNECTING SKEWED PIPES MAY INCLUDE PIPE ELBOWS OR CIRCULAR PRECAST BASE UNITS. SEE SEPARATE STANDARDS.

NOTE: REINFORCING STEEL SHALL BE No. 4 STEEL BARS AT 12" O.C. BOTH WAYS OR EQUIVALENT WIRE FABRIC REINFORCING.

SPECIAL NOTE:
STANDARD 1019A INLETS ARE FOR USE AT LOW POINTS AND WHERE HYDRAULIC LOW CAPACITY GRATES ARE SUFFICIENT. WHERE HIGHER CAPACITY GRATES ARE NEEDED ON A CONTINUOUS GRADE, STANDARD 1019B IS RECOMMENDED.

NOTE:
SEE STANDARD 1019A (BRICK) AND STANDARD 1040 FOR CONSTRUCTION ALTERNATES BRICK MASONRY AND CIRCULAR PRECAST SECTIONS RESPECTIVELY.

DIMENTIONS FOR DROP INLETS

PIPE SIZE	TYPE "A"		TYPE "B"		TYPE "C"				TYPE "E"			
	MIN. h	MIN. H	MIN. h	MIN. H	W1or W2	a	MIN. h	MIN. H	W1or W2	a	MIN. h	MIN. H
15"	2'- 0"	2'-8½"	2'- 7"	3'-3½"	2'- 0"		2'-7"	3'-3½"	2'- 0"		2'-7"	3 - 3½"
18"	2'-3½"	3'- 0"	2'-10"	3'-6½"	2' - 0"		2'-10"	3'-6½"	2'- 0"		2'-10"	3 - 6½"
24"					3' - 0"	0'- 6"	4'- 3½"	5'- 0"	3'- 0"	0'- 6"	4'- 7"	5 - 3 "
30"					3' - 6"	0'- 9"	4'-10½"	5'- 7"	3'- 6"	0'- 9"	5'- 2"	5 - 10"
36"					4' - 0"	1'- 0"	5'- 5½"	6'- 2"	4'- 0"	1'- 0"	5'- 9"	6 - 3 "
42"					4' - 6"	1'- 3"	6'-½	6'- 8"	4'- 6"	1'- 3"	6'- 4"	7 - 0 "
48"					5' - 0"	1'- 6"	6'- 7½"	7'- 3"	5'- 0"	1'- 6"	6'- 11"	7 - 7 "
54"					5' - 6"	1'- 9"	7'- 2½"	7'-10"	5'- 6"	1'- 9"	7'- 6"	8 - 2 "
60"					6' - 0"	2'- 0"	7'- 9½"	8'- 5"	6'- 0"	2'- 0"	8'- 1"	8 - 9 "

DEPARTMENT OF TRANSPORTATION
STATE OF GEORGIA

DATE | REVISION | BY

STANDARD
PRECAST DROP INLETS

SCALE AS SHOWN — AUG. 1999

DESIGNED ____ DRAWN ____ TRACED ____ CHECKED ____

(SUBMITTED) James A. Kraus
STATE ROAD & AIRPORT DESIGN ENGINEER

(APPROVED) Carol L. Freddy
CHIEF ENGINEER

NUMBER 1019A PRECAST