STATE	PROJECT NUMBER	SHEET NO.	TOTAL SHEETS
GA.	STP00-M000-00(355)	38	83

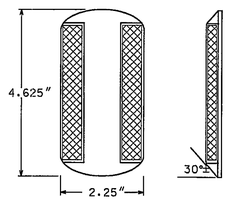

TYPE 1
ONE COLOR FOR TWO-WAY TRAFFIC
(CLEAR OR YELLOW)

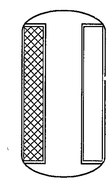

TYPE 2
ONE COLOR FOR ONE-WAY TRAFFIC
(CLEAR, YELLOW OR RED)

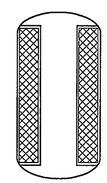

TYPE 3
TWO COLOR FOR ONE-WAY TRAFFIC
(ANY COMBINATION OF CLEAR, YELLOW OR RED)

RAISED REFLECTIVE MARKERS

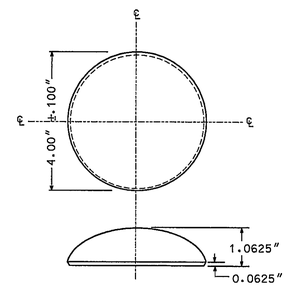

TYPE 4
OPAQUE CERAMIC MARKER
(WHITE, YELLOW OR BLACK)

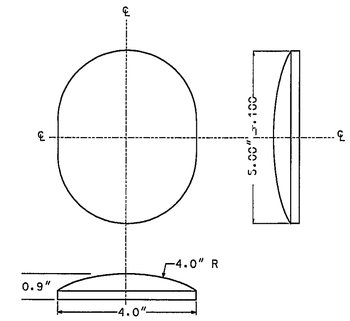

TYPE 5
OVAL CERAMIC MARKER
(NON-REFLECTIVE WHITE, YELLOW OR BLACK)

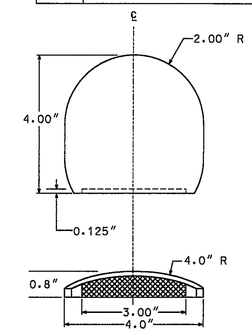

TYPE 6
REFLECTIVE CERAMIC MARKER
(REFLECTIVE WHITE, YELLOW OR BLACK)

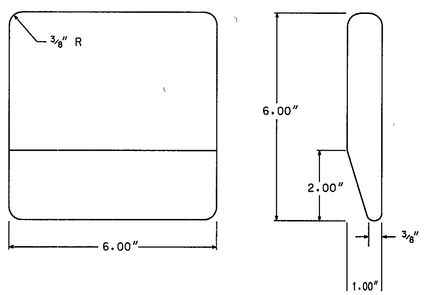

TYPE 7
NON-REFLECTIVE MARKER
(WHITE OR YELLOW)

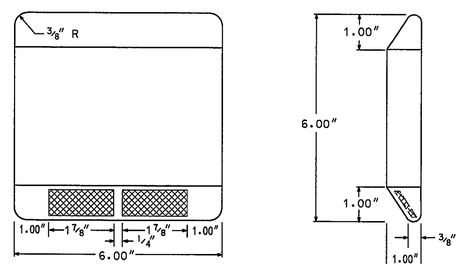

TYPE 8
REFLECTIVE MARKER
(WHITE OR YELLOW)

CERAMIC JIGGLE BAR MARKER

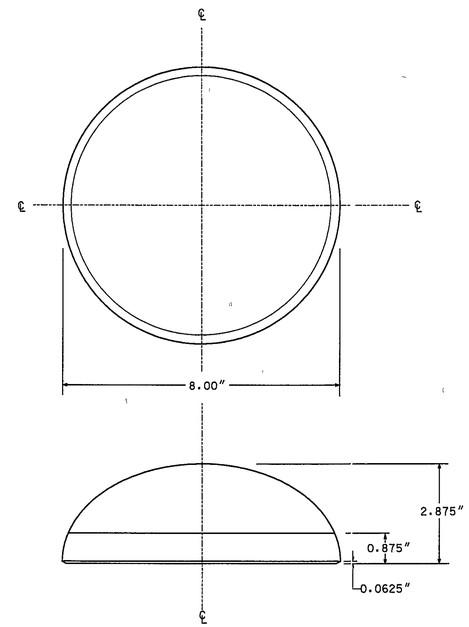

TYPE 9
NON-REFLECTIVE
(WHITE OR YELLOW)

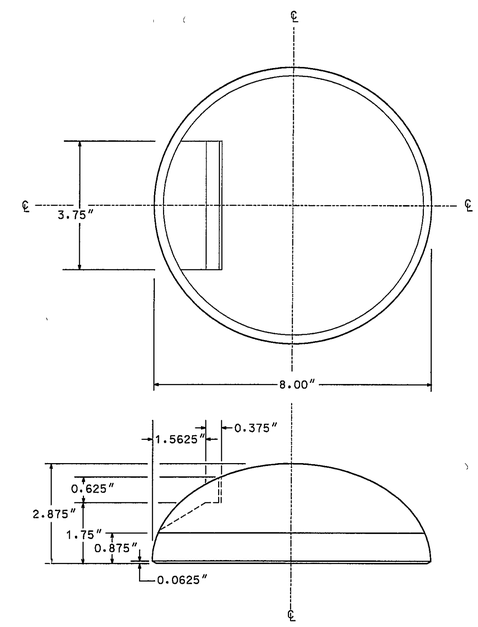

TYPE 10
REFLECTIVE
(WHITE OR YELLOW)

CERAMIC CHANNEL MARKER

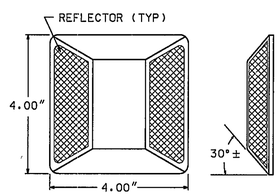

TYPE 11
ONE COLOR FOR TWO-WAY TRAFFIC
(CLEAR OR YELLOW)

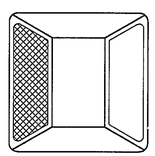

TYPE 12
ONE COLOR FOR ONE-WAY TRAFFIC
(CLEAR, YELLOW, OR RED)

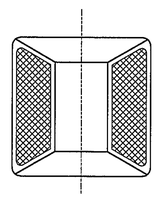

TYPE 13
TWO COLOR FOR ONE-WAY TRAFFIC
(ANY COMBINATION OF CLEAR, YELLOW, OR RED)

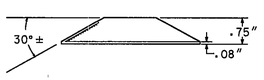

ALTERNATE RAISED REFLECTIVE MARKERS

GENERAL NOTES:

1. SPECIFICATIONS SHALL BE PER THE SPECIAL PROVISIONS, OR AS SPECIFIED BELOW.
2. COLORS FOR REFLECTIVE ELEMENTS SHALL BE EITHER CLEAR, YELLOW, OR RED AS SPECIFIED.
3. THE SHELL OF THE REFLECTIVE MARKERS SHALL BE OF ONE COLOR OR OF A COMBINATION OF TWO COLORS, WHICH SHALL BE THE SAME AS THE REFLECTIVE ELEMENT.
4. THE SURFACE OF OPAQUE CERAMIC MARKERS SHALL BE GLAZED AND OF THE COLOR SPECIFIED IN THE PLANS WITH A WHITE, VITREOUS, CERAMIC BASE.
5. RAISED REFLECTIVE MARKERS TYPES 1, 2, AND 3 SHALL BE STIMSONITE SERIES 948, OR EQUAL.
6. CERAMIC JIGGLE BARS SHALL BE FERRO CORPORATION PENMARK P-6, OR EQUAL. ADHESIVE SHALL BE PER MANUFACTUROR'S SPECIFICATIONS.
7. CERAMIC CHANNEL MARKERS SHALL BE FERRO CORPORATION PENMARK P-18, OR EQUAL. ADHESIVE SHALL BE PER MANUFACTUROR'S SPECIFICATIONS.
8. COLORS FOR ALL RAISED PAVEMENT MARKERS SHALL BE AS SPECIFIED IN THE PLANS.

DATE	REVISIONS

GEORGIA DEPARTMENT OF TRANSPORTATION
OFFICE OF TRAFFIC SAFETY & DESIGN

DETAILS OF
RAISED PAVEMENT MARKERS

NO SCALE JANUARY 2000

PCRASH

PCBDTB

T-15C

01 16 10 2003 02 10 dgn aware pavd posted