REQUIRED PAVEMENT
- Ⓐ ASPHALTIC CONCRETE, 12.5mm SUPERPAVE, TYPE 2, 165 LBS /S.Y
- Ⓑ ASPHALTIC CONCRETE, 19mm SUPERPAVE, 220 LBS./S.Y.
- Ⓒ ASPHALTIC CONCRETE BASE, 25mm SUPERPAVE, 770 LBS./S.Y.
- Ⓓ 12" GRADED AGGREGATE BASE
- Ⓔ LEVELING AS REQUIRED
- Ⓕ 8" X 30" CONCRETE CURB & GUTTER, TYPE 2, STD 9032-B
- Ⓖ CONCRETE RETAINING WALL, STD. 9031L
- Ⓗ CONCRETE SIDEWALK, 4", GDOT DETAIL A-3
- Ⓙ 4" CONCRETE SLOPE PAVING
- Ⓚ 8" X 30" CONCRETE GUTTER WITH RAISED EDGE

TANGENT SECTION TS-03 S.R. 83
APPLIES TO STA. 102+53 - STA. 103+00.93
APPLIES TO STA. 107+92.50 - STA. 109+00

SLOPE CONTROLS		
SLOPE	CUT	FILL
4:1	0-10'	0-10'
2:1	OVER 10'	OVER 10'

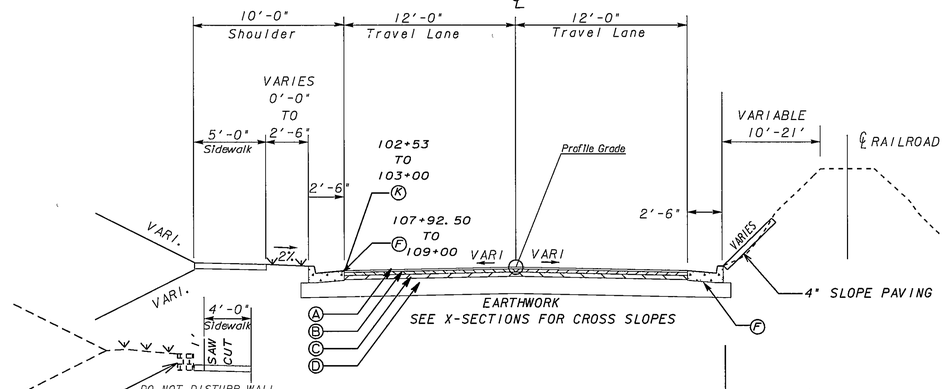

APPLIES TO
STA. 102+53 - STA. 107+00

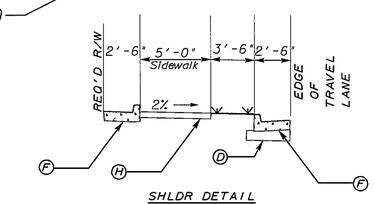

SHLDR DETAIL
APPLIES FROM
STA. 107+70 - STA. 108+54 LT

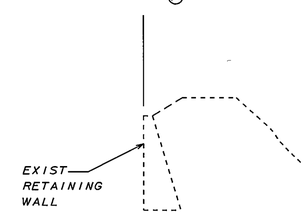

SHLDR DETAIL
APPLIES FROM
STA 102+53 - STA. 103+00 93 RT

*** STANDARD CROSS - SLOPE MAY BE VARIED - AS DIRECTED BY THE ENGINEER - TO BEST FIT THE EXISTING ROADWAY AS PER SECTION 149 OF THE STANDARD SPECIFICATIONS. SEE "ALLOWABLE RANGES TABLE" BELOW.

ALLOWABLE RANGES TABLE

FOR THIS PROJECT, CROSS SLOPES THAT ARE ADJUSTED TO "BEST FIT" EXISTING PAVEMENT SLOPES ARE SUBJECT TO THE FOLLOWING LIMITS:

A: NORMAL CROWN

SECTION WITH GRADES 0.5% OR GREATER	SECTION WITH GRADES 0.5% OR LESS
0.0150 FT/FT - MINIMUM	0.0156 FT/FT - MINIMUM
0.0208 FT/FT - DESIRABLE	0.0208 FT/FT - DESIRABLE
0.0250 FT/FT - MAXIMUM	0.0300 FT/FT - MAXIMUM

B: SUPERELEVATION RATE

S.E. RATE SHOWN ON PLANS OR S.E. RATE EXISTING IN FIELD (WHICHEVER IS GREATER)

C: SUPERELEVATION TRANSITION LENGTH (LENGTH FROM FLAT TO FULL S.E.)

	RATE OF CHANGE	CORRESPONDING DIFFERENCE IN GRADE BETWEEN PIVOT POINT AND EDGE OF PAVEMENT
MINIMUM	1:150	0.67%
DESIRABLE	1:200	0.50%
MAXIMUM	1:300	0.33%

*LENGTH SHALL BE SET TO AVOID CREATING A FLAT GUTTER GRADE ON LOW SIDE AND TO AVOID FLAT CROSS - SLOPES AT OR NEAR THE LOW POINT OF VERTICAL CURVES.

D: POSITIONING OF SUPERELEVATION TRANSITION LENGTH ON SIMPLE CURVES

50% OF TRANSITION INSIDE CURVE - MAXIMUM
33% OF TRANSITION INSIDE CURVE - DESIRABLE
20% OF TRANSITION INSIDE CURVE - MINIMUM

NOTE: CROWN WIPE OUT SHALL BE AT THE SAME RATE AS THE S.E. TRANSITION.

E: SMOOTHING OF BREAKS IN EDGE PROFILE AT BEGIN AND END OF TRANSITION SHALL BE ACCOMPLISHED BY VERTICAL CURVE WITH A MINIMUM LENGTH (IN FEET) EQUAL TO THE SPEED DESIGN (IN MPH).

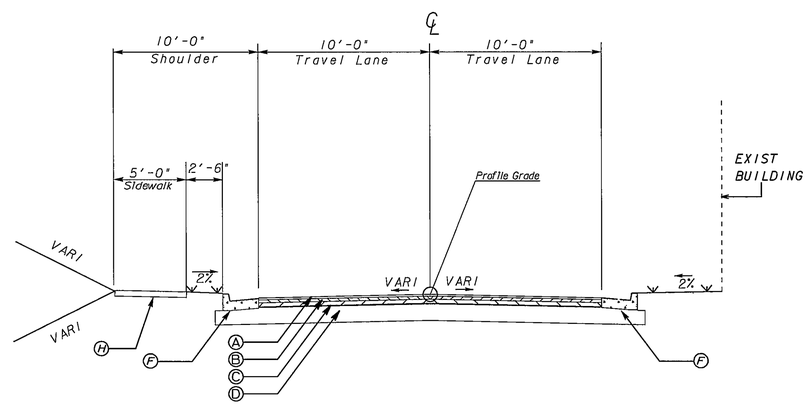

TANGENT SECTION TS-04 CHURCH ST.
APPLIES TO STA. 10+00 TO STA. 11+64.18

GEORGIA
DEPARTMENT
OF
TRANSPORTATION

NOT TO SCALE

REVISION DATES

STATE OF GEORGIA
DEPARTMENT OF TRANSPORTATION
OFFICE: DISTRICT 2 DESIGN - TENNILLE
TYPICAL SECTIONS

DRAWING No
5-02

GPLN