STATE	PROJECT NUMBER	SHEET NO.	TOTAL SHEETS
GA.	STP-M000-00 (334)	21	33

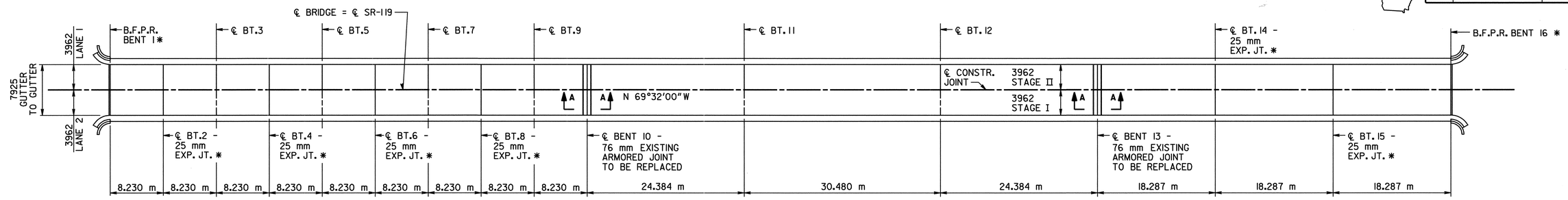

DECK PLAN

* SEE 25 mm EXPANSION JOINT DETAIL

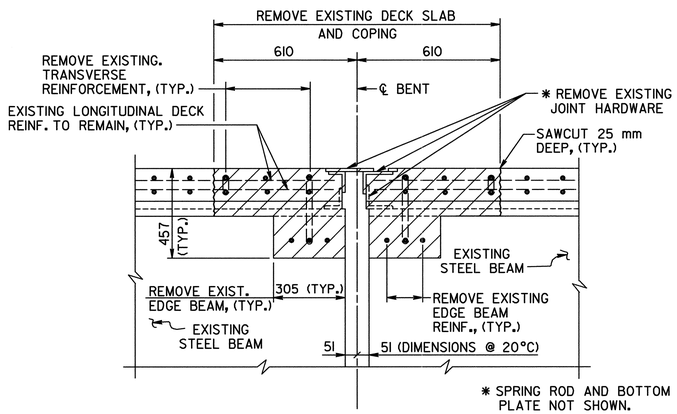

EXISTING

SECTION A-A

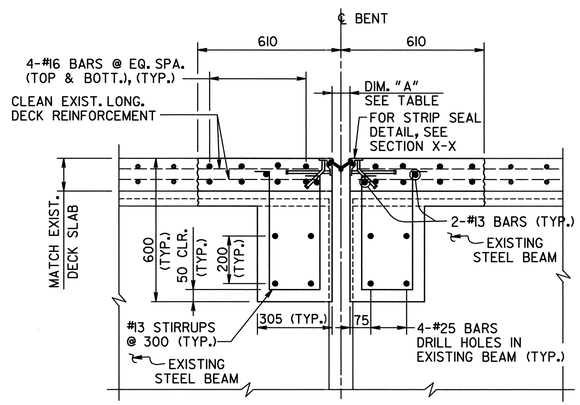

PROPOSED

SECTION A-A

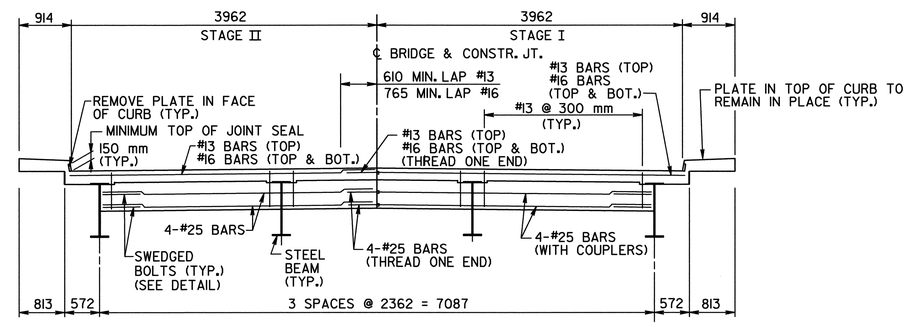

NOTE : HANDRAIL NOT SHOWN.

SECTION AT EDGE BEAM

NOTE : #25 BARS SHALL BE FULL LENGTH OR PROVIDED WITH 1100 MIN. LAP

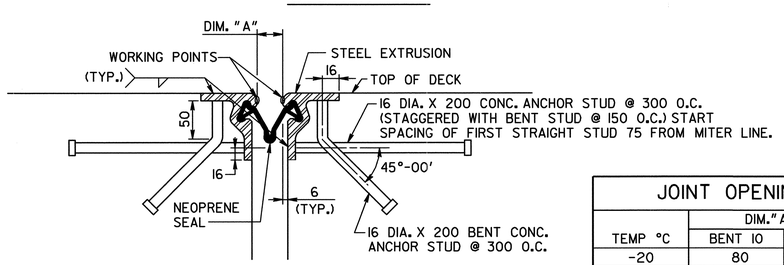

SECTION X-X

JOINT OPENING		
	DIM. "A" (mm)	
TEMP °C	BENT 10	BENT 13
-20	80	70
-15	76	68
-10	72	65
-5	69	62
0	65	60
5	61	58
10	57	55
15	54	53
20	50	50
25	46	48
30	43	45
35	39	43
40	35	40
45	32	38
50	28	35

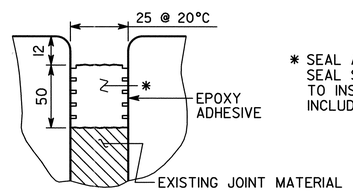

* SEAL AS PER SPECIAL PROVISION SECTION 449. SEAL SHALL BE 50 mm BY 32 mm WIDE PRIOR TO INSTALLATION. COST OF SEAL SHALL BE INCLUDED IN OVERALL BID SUBMITTED.

25 mm EXPANSION JOINT DETAIL

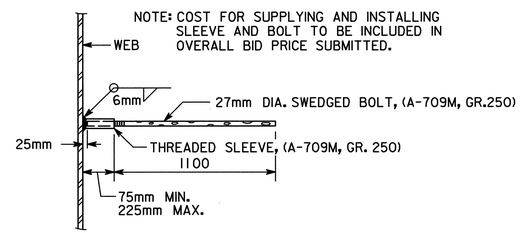

EDGE BEAM BAR LAP DETAIL

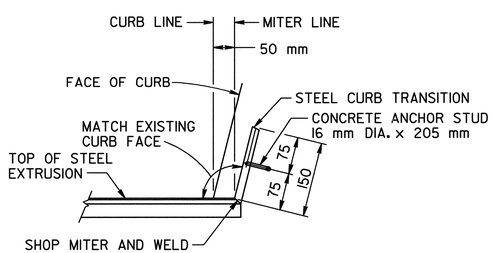

CURB DETAIL

JOINT REPLACEMENT CONSTRUCTION SEQUENCE

PERFORM THE FOLLOWING IN ACCORDANCE WITH THE TRAFFIC CONTROL PLANS:

1. SAWCUT AND REMOVE EXISTING DECK SLAB AND EDGE BEAM CONCRETE TO LIMITS SHOWN ON PLANS.
2. REMOVE EXISTING EDGE BEAM AND TRANSVERSE DECK SLAB REINFORCEMENT.
3. CLEAN EXISTING DECK REINFORCEMENT TO REMAIN IN PLACE.
4. INSTALL NEW STRIP SEAL DECK JOINT AND PLACE DECK AND EDGE BEAM REINFORCEMENT. SPLICE STEEL EXTRUSIONS BETWEEN STAGES USING FULL PENETRATION GROOVE WELDS.
5. FORM AND CAST EDGE BEAM AND DECK SLAB CONCRETE IN ACCORDANCE WITH SECTION 504 OF THE STANDARD SPECIFICATIONS.

BRIDGE NO. 4

J.B. TRIMBLE, INC.
5075 Roswell Rd.
Atlanta GA 30342
(404) 843-8171

GEORGIA
DEPARTMENT OF TRANSPORTATION
OPERATIONS DIVISION-OFFICE OF MAINTENANCE

DISTRICT 5 BRIDGE REPAIRS
(JOINT REPLACEMENT)
SR-119 OVER OGEECHEE RIVER
BULLOCH-EFFINGHAM CO. STP-M000-00 (334)

GEORGIA REGISTERED No. 16685 PROFESSIONAL ENGINEER SAMUEL L. POWELL JR.
2-18-00

BY	REVISIONS	DATE

BRIDGE SHEET 2 OF 4

SCALE: NONE FEBRUARY 2000

DESIGNED GLE CHECKED SLP REVIEWED EHG
DRAWN ITD DESIGN GROUP MAINTENANCE APPROVED STH

C:\DGN\8923\7\34\GDM72 4DK.DGN 2-18-00 ITD