STATE	PROJECT NUMBER	SHEET NO.	TOTAL SHEETS
GA.	NHS-M000-00 (332)	7	

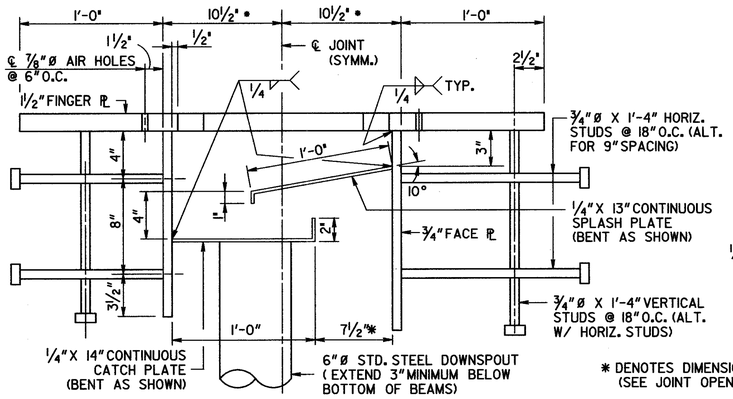

* DENOTES DIMENSION @ 60°F (SEE JOINT OPENING TABLE)

SECTION X-X

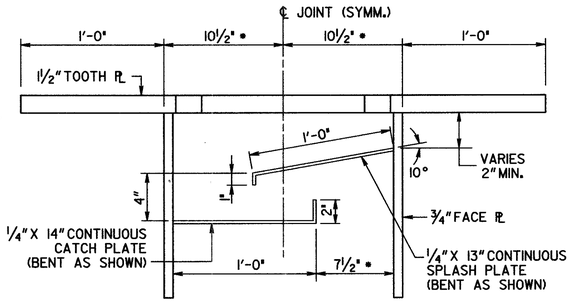

SECTION Y-Y

JOINT REPLACEMENT CONSTRUCTION SEQUENCE

PERFORM THE FOLLOWING IN ACCORDANCE WITH THE TRAFFIC CONTROL PLANS:

1. SAWCUT AND REMOVE EXISTING DECK SLAB, BARRIER, AND EDGE BEAM CONCRETE TO LIMITS SHOWN ON PLANS. REMOVE EXISTING FINGER JOINT.
2. CLEAN EXISTING EDGE BEAM AND BARRIER REINFORCEMENT TO REMAIN IN PLACE.
3. INSTALL NEW FINGER PLATE DECK JOINT AND PLACE DECK, BARRIER AND EDGE BEAM REINFORCEMENT. SPLICE STEEL PLATES BETWEEN STAGES USING FULL PENETRATION GROOVE WELDS.
4. FORM AND CAST EDGE BEAM , DECK SLAB , AND BARRIER CONCRETE IN ACCORDANCE WITH SPECIAL PROVISION 503.

NOTE: PERFORM STRIP SEAL REPLACEMENT IN ACCORDANCE WITH FINGER JOINT STAGING.

NOTES:

1. ALL STEEL FOR JOINT ASSEMBLY SHALL BE ASTM A-588, GRADE 50.
2. PLACE CONCRETE UNDER THE FINGER PLATE AND VIBRATE UNTIL THE CONCRETE IS FORCED THROUGH THE ⅞" DIA. AIR HOLES.
3. ALL BOLTS AND WASHERS SHALL CONFORM TO ASTM A-325.
4. ALL FLATHEAD COUNTERSUNK SCREWS SHALL CONFORM TO ASTM F738 TYPE 304 (STAINLESS STEEL).
5. CONTRACTOR SHALL SUBMIT SHOP DRAWINGS TO THE ENGINEER PRIOR TO FABRIACTION OF JOINT.
6. ☒ REMOVE TO LIMITS OF EXISTING FINGER JOINT. ORIGINAL PLANS SHOW DIMENSIONS EQUAL TO 3'-5" @ 60°F.
7. JOINT OPENING VARIES. RECENT FIELD MEASUREMENTS SHOW JOINT OPENING EQUAL TO 5" @ 85°F.

THE SCROLL IS TO BE MADE BY A SINGLE CUT OF MACHINE GUIDED TORCH AND SHARP CORNERS TO BE REMOVED BY GRINDING.

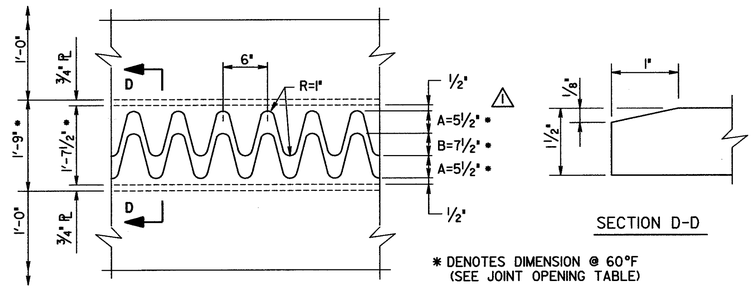

SECTION D-D

* DENOTES DIMENSION @ 60°F (SEE JOINT OPENING TABLE)

PLAN

FINGER PLATE DETAIL

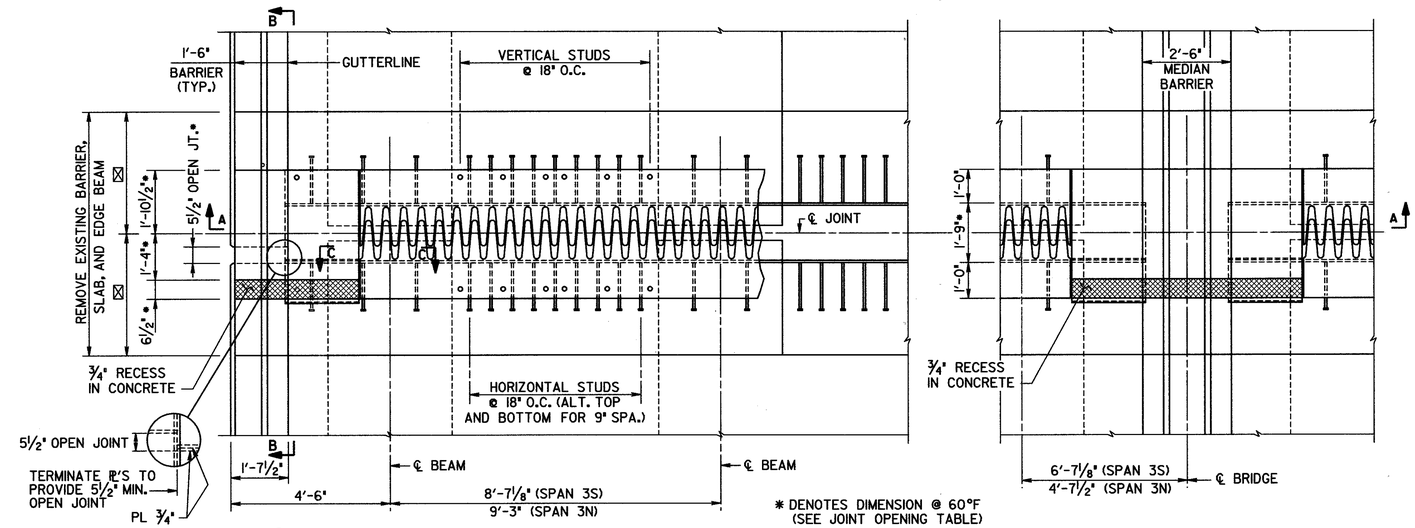

* DENOTES DIMENSION @ 60°F (SEE JOINT OPENING TABLE)

FINGER JOINT PLAN

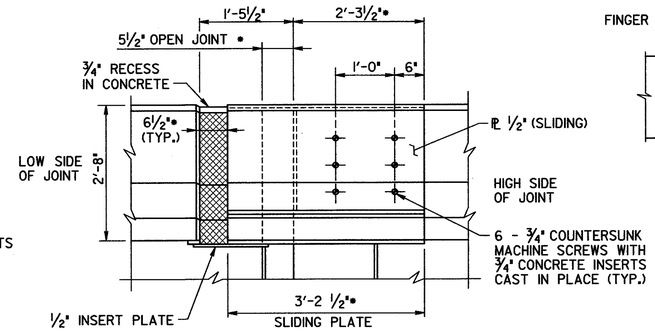

SECTION B-B

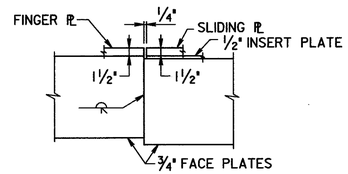

SECTION C-C

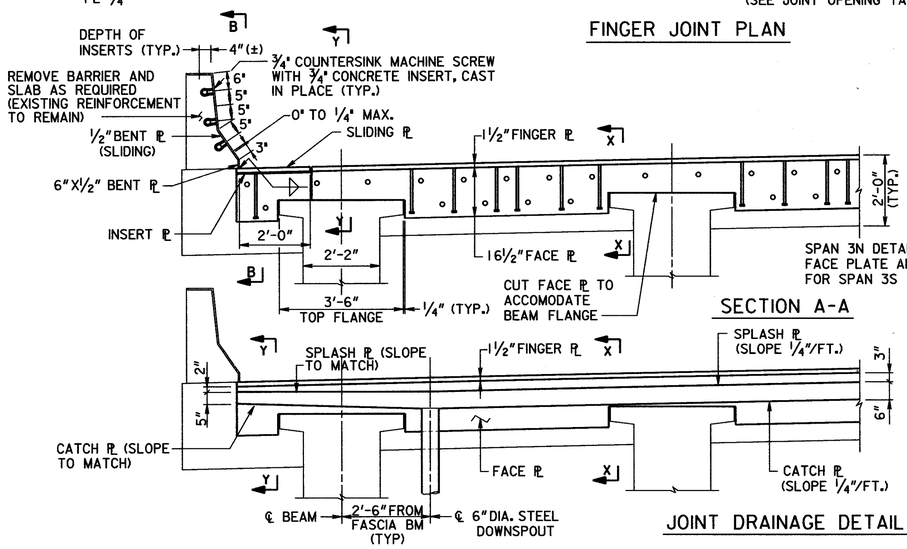

SECTION A-A

JOINT DRAINAGE DETAIL

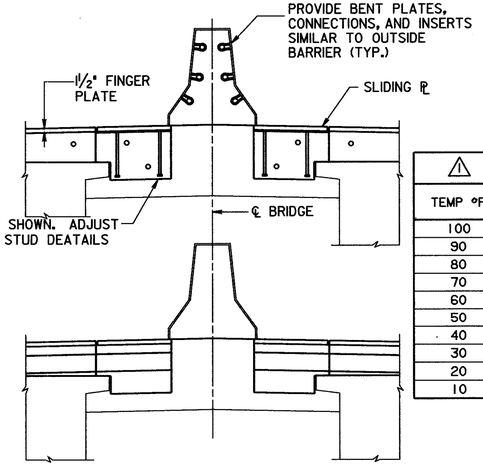

⚠ JOINT OPENING

TEMP °F	DIM." A" (INCH)	DIM." B" (INCH)
100	0.83	12.17
90	2.00	11.00
80	3.17	9.83
70	4.33	8.67
60	5.50	7.50
50	6.67	6.33
40	7.83	5.17
30	9.00	4.00
20	10.17	2.83
10	11.33	1.67

BRIDGE NO. 1

JBT J.B. Trimble, Inc.
6445 Powers Ferry Road
Atlanta GA 30339-2933
(770) 952-1022

GEORGIA
DEPARTMENT OF TRANSPORTATION
OPERATIONS DIVISION-OFFICE OF MAINTENANCE

TALMADGE BRIDGE
(REHABILITATION PLANS)
JOINT DETAILS

CHATHAM COUNTY NHS-M000-00 (332)

SCALE: AS SHOWN MAY 2001

REVISIONS	BY	DATE
JOINT OPENING	GLE	11-08-01

GEORGIA REGISTERED No. 16885 PROFESSIONAL ENGINEER SAMUEL POWELL, JR. 11-08-01

BRIDGE SHEET 5 OF 5

DESIGNED MDT | CHECKED GLE | REVIEWED EHG
DRAWN ITD | DESIGN GROUP MAINTENANCE | APPROVED STH

C:\DGN\ 2019\CT5\BOL5-IJT.DGN 2-22-01 ITD