STATE	PROJECT NUMBER	SHEET NO.	TOTAL SHEETS
GA.	NHS-M000-00 (332)	5	8

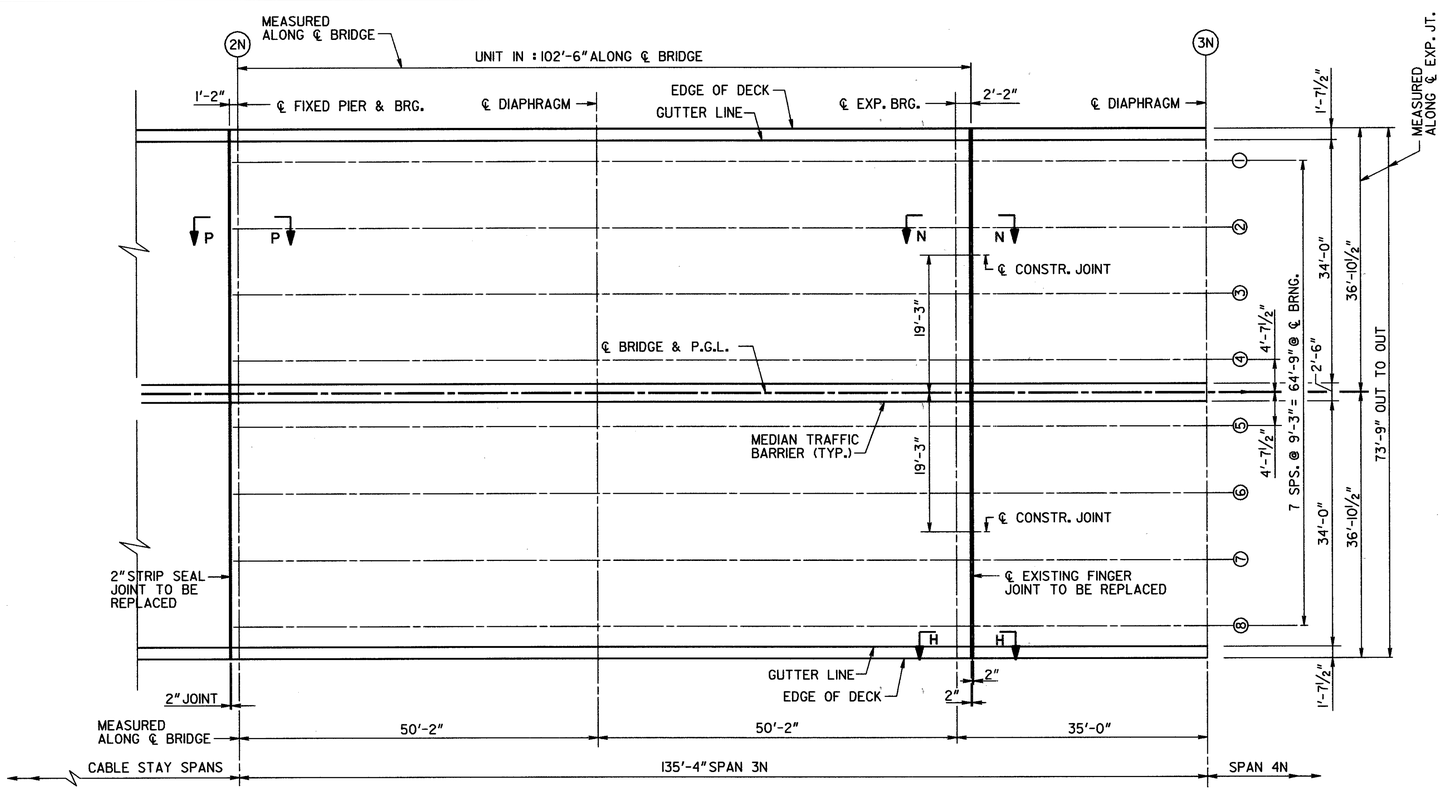

PARTIAL DECK PLAN - SPAN 3N

② DENOTES GIRDER LINE

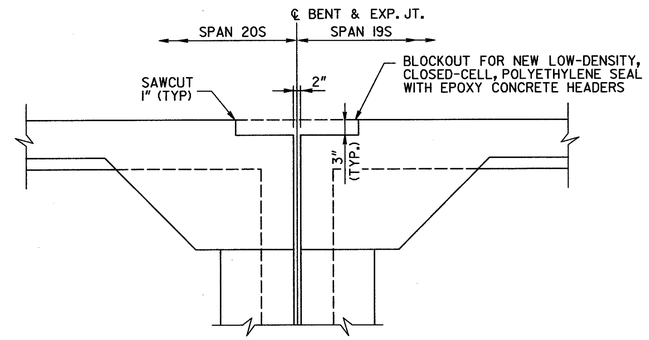

SECTION Q-Q, BENT 19S

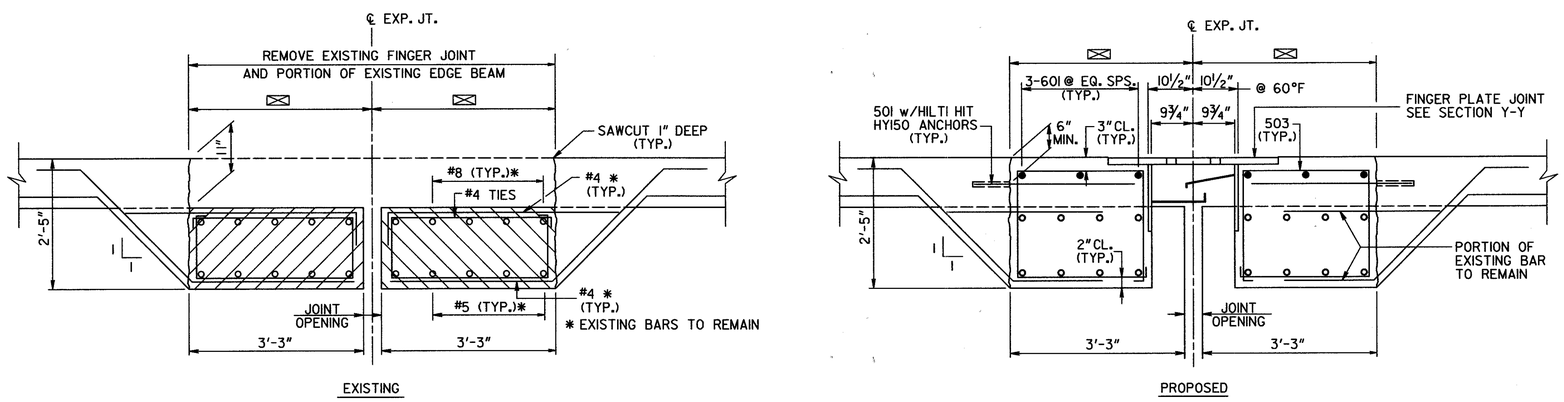

SECTION H-H

NOTES:

1. REMOVE TO LIMITS OF EXISTING FINGER JOINT. ORIGINAL PLANS SHOW DIMENSIONS EQUAL TO 3'-5" @ 60°F.
2. JOINT OPENING VARIES. RECENT FIELD MEASUREMENTS SHOW JOINT OPENING EQUAL TO 5" @ 85°F.

GEORGIA REGISTERED No. 16685 PROFESSIONAL SANDRA W. POWELL
09-13-01

BRIDGE SHEET 3 OF 5

BY	REVISIONS	DATE

BRIDGE NO. 1

JBT J.B. Trimble, Inc.
6445 Powers Ferry Road
Atlanta GA 30339-2933
(770) 952-1022

GEORGIA
DEPARTMENT OF TRANSPORTATION
OPERATIONS DIVISION-OFFICE OF MAINTENANCE

TALMADGE BRIDGE
(REHABILITATION PLANS)
DECK PLAN - SPAN 3N

CHATHAM COUNTY NHS-M000-00 (332)

SCALE: AS SHOWN MAY 2001

DESIGNED MDT CHECKED GLE REVIEWED EHG
DRAWN ITD DESIGN GROUP MAINTENANCE APPROVED STH

C:\DGN\ 2019\CT5\B0L5- IPE.DGN 2-28-01 ITD