STATE	PROJECT NUMBER	SHEET NO.	TOTAL SHEETS
GA.	CSNHS-M000-00(331)	44	92

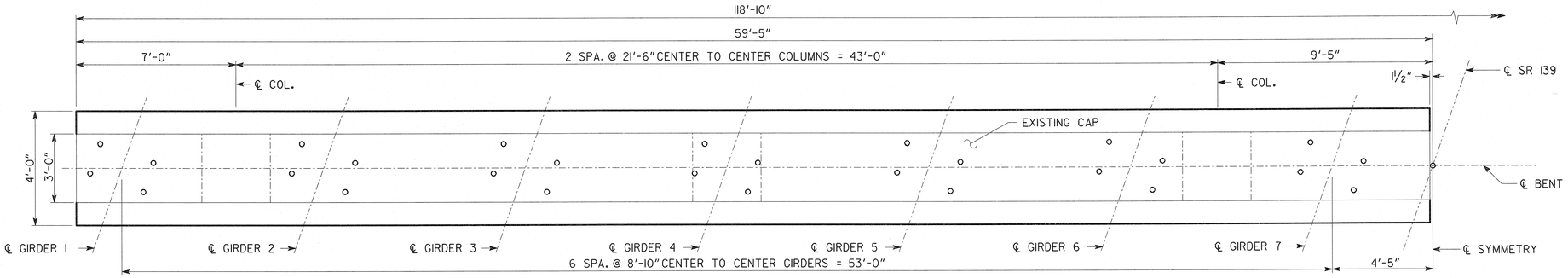

PARTIAL PLAN

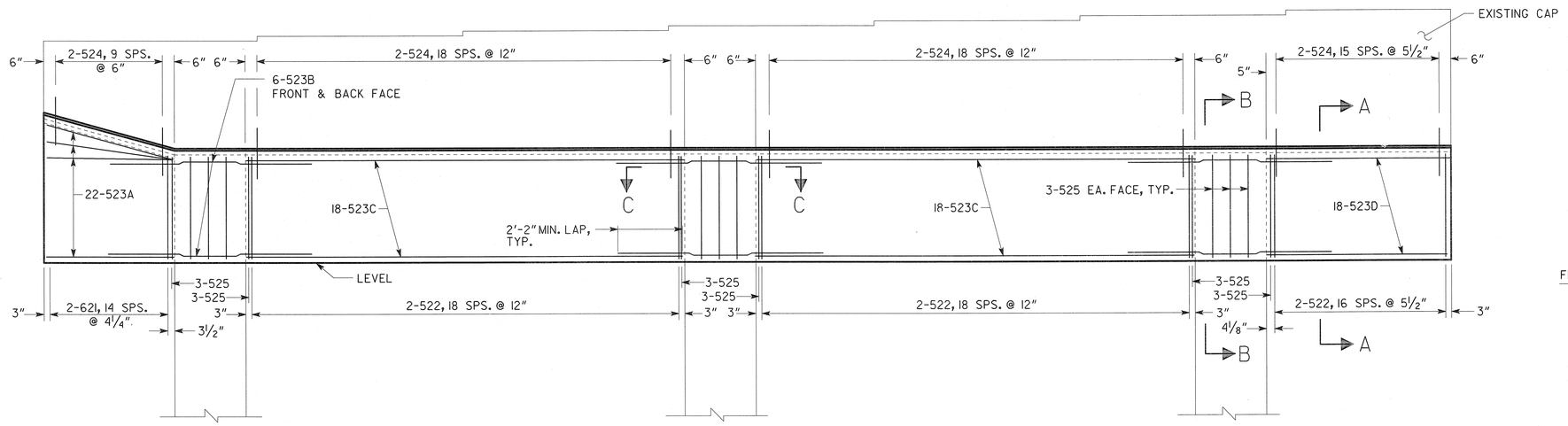

PARTIAL ELEVATION

LOOKING AHEAD
LEFT BENT SHOWN,
RIGHT BENT SIMILAR

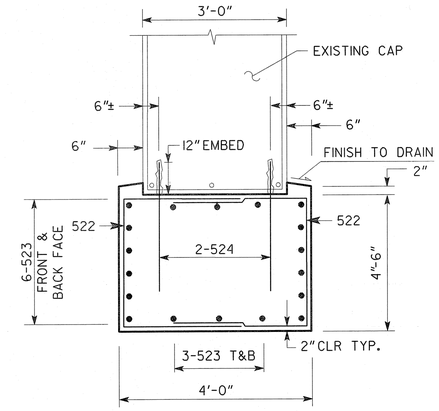

SECTION A-A

(NO SCALE)

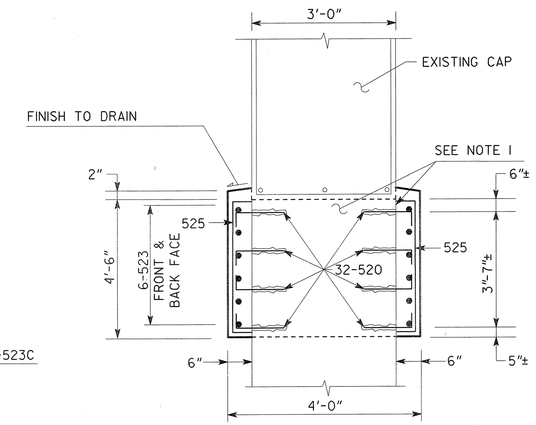

SECTION B-B

(NO SCALE)

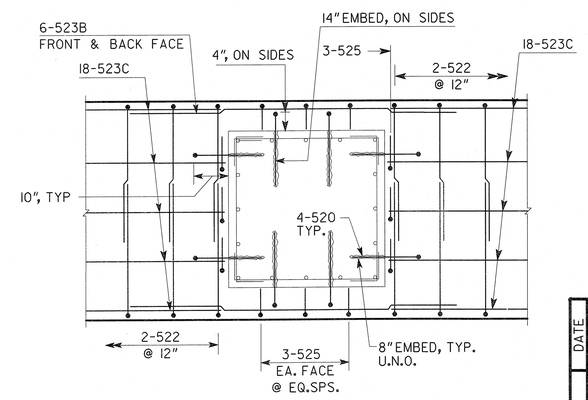

SECTION C-C

(NO SCALE)

SUBSTRUCTURE QUANTITIES	
ITEM	BENT 2
CY CLASS "AA" CONCRETE	75.4
LB BAR REINF STEEL	7402

NOTES:

1. BOTTOM OF BENT CAP AND PORTIONS OF COLUMNS TO BE COVERED BY RETROFIT CAP SHALL BE HEAVY SANDBLASTED.
2. 524 BARS SHALL BE ANCHORED USING HILTI HVA ADHESIVE SYSTEM OR APPROVED EQUAL. INSTALL ACCORDING TO THE MANUFACTURER'S RECOMMENDATIONS.
3. 520 BARS SHALL BE ANCHORED USING HILTI HVA OR HILTI HIT HY 152 ADHESIVE SYSTEM OR APPROVED EQUAL. INSTALL ACCORDING TO THE MANUFACTURER'S RECOMMENDATIONS.
4. LAP 520 BARS 2'-2" MIN., LAP 620 BARS 2'-7" MIN.
5. DETAILS SYMMETRICAL ABOUT ℄ BRIDGE.
6. EPOXY PRESSURE INJECT CRACKS IN EXISTING BENT CAP.

ANTICIPATED CONSTRUCTION SEQUENCE

1. DRILL HOLES FOR EMBEDS.
2. PREPARE EXISTING CONCRETE SURFACES BY ROUGHENING WITH HEAVY SANDBLASTING BOTTOM OF CAP AND AREAS OF EXISTING COLUMNS TO BE ENCASED IN RETROFIT CAP.
3. BLOW OUT EMBED HOLES.
4. INSTALL FALSEWORK FOR RETROFIT CAP.
5. INSTALL REINFORCEMENT.
6. INSTALL EMBEDS USING APPROVED ADHESIVE SYSTEM.
7. FORM, POUR, CURE CONCRETE AND REMOVE FALSEWORK AND FRAMEWORK.

BRIDGE NO. 1

Heath & Lineback Engineers INCORPORATED
2390 CANTON ROAD, BUILDING 200
MARIETTA, GEORGIA 30066

GEORGIA
DEPARTMENT OF TRANSPORTATION
OPERATIONS DIVISION - OFFICE OF MAINTENANCE

INTERMEDIATE BENT 2 REPAIR
BRIDGE REHABILITATION ON
SR 139 (RIVERDALE RD) OVER I-285
CLAYTON COUNTY CSNHS-M000-00(331)

SCALE: ⅜"=1'-0" FEBRUARY 2008

DESIGNED KAK | CHECKED RLF / FRB | REVIEWED GBL
DRAWN NYC | DESIGN GROUP | APPROVED

REVISIONS | DATE | BY

BRIDGE SHEET 8 OF 9

DWG NO 35-08

J:\4019\4019.331 - CLAYTON\BRIDGE\ 4019.331.BENT2.DGN