STATE	PROJECT NUMBER	SHEET NO.	TOTAL SHEETS
GA.	CSNHS-M000-00(331)	41	92

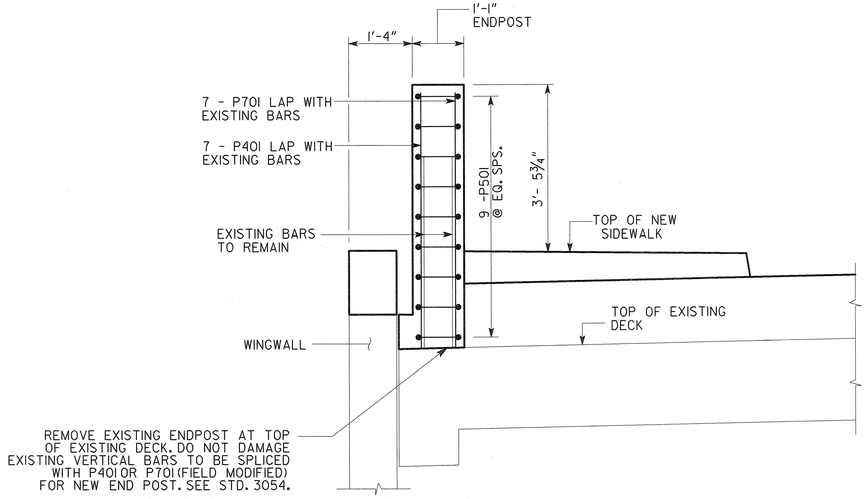

ENDPOST SECTION

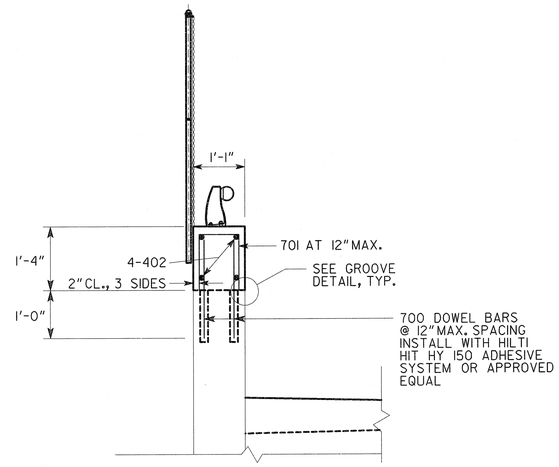

PARAPET SECTION

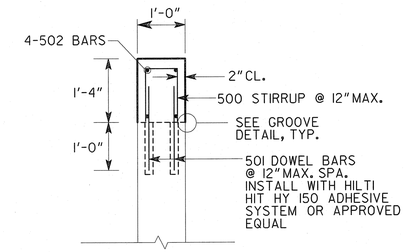

WINGWALL SECTION

NOTE: FANCE AND HANDRAIL NOT SHOWN.

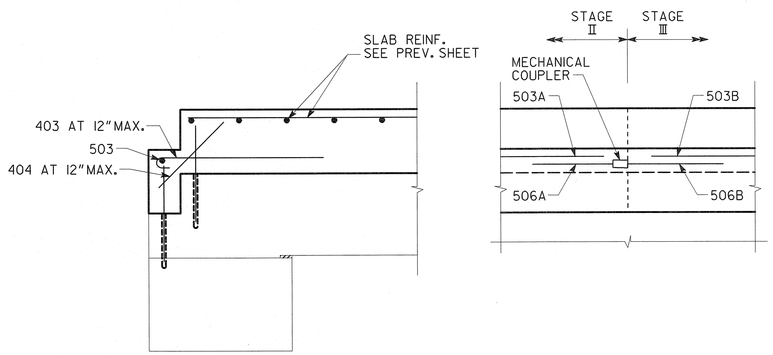

PAVING REST SECTION

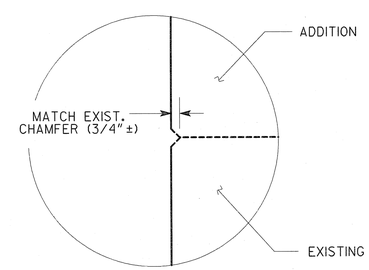

GROOVE DETAIL

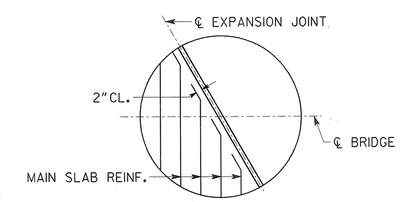

AT EXPANSION JOINT

BARS ARE DETAILED IN BAR DETAILS AS EQUIVALENT FULL LENGTH BARS.

BAR BENDING DETAILS AT SKEWED JOINTS

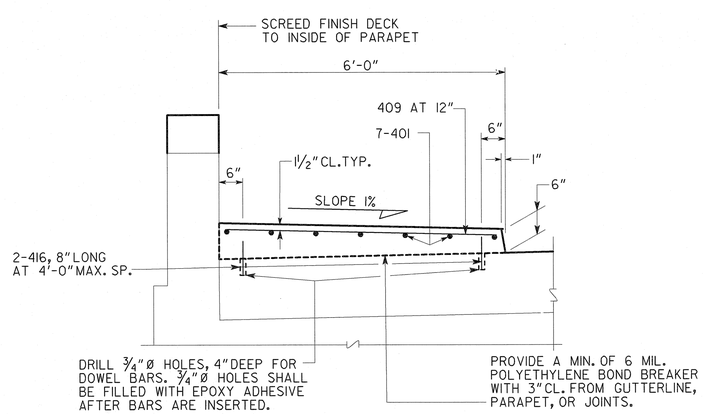

SIDEWALK DETAIL
AT ABUTMENTS 1 & 3

BRIDGE NO. 1

Heath & Lineback Engineers INCORPORATED
2390 CANTON ROAD, BUILDING 200
MARIETTA, GEORGIA 30066

GEORGIA
DEPARTMENT OF TRANSPORTATION
OPERATIONS DIVISION - OFFICE OF MAINTENANCE

CONCRETE DECK OVERLAY
MISCELLANEOUS DETAILS
BRIDGE REHABILITATION ON
SR 139 (RIVERDALE RD) OVER I-285
CLAYTON COUNTY CSNHS-M000-00(331)

SCALE: NO SCALE FEBRUARY 2008

REVISIONS	BY	DATE

BRIDGE SHEET 5 OF 9

DESIGNED KAK CHECKED RLF / FRB REVIEWED GBL
DRAWN NYC DESIGN GROUP APPROVED

DWG NO 35-05

J:\4019\4019.331- CLAYTON\BRIDGE\4019.331_DET.DGN