COUNTY	PROJECT NUMBER	SHEET NO.	TOTAL SHEETS
CLAYTON	CSNHS-M000-00(331)	6	92

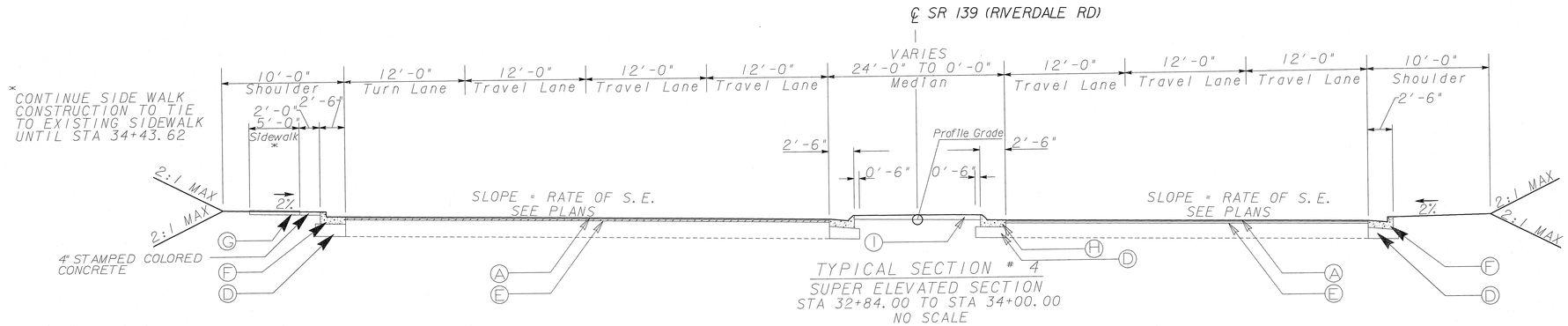

TYPICAL SECTION # 4
SUPER ELEVATED SECTION
STA 32+84.00 TO STA 34+00.00
NO SCALE

SUPERELEVATION SLOPE RATE		
△ SLOPE AS FOLLOWS □ SLOPE AS FOLLOWS		
S.E.	□ SLOPE	△ SLOPE
-8.00	0.00	-8.00
-6.25	+1.75	-6.25
N.C.	+6.25	-6.25
+6.25	+6.25	-1.75
+8.00	+8.00	0.00

SEE SHEET 5-01
FOR S.E. TABLE

SLOPE CONTROL FILL & CUT	
SLOPE	HIGH FROM SHLD. PT.
4:1	0' - 10'
✳ 2:1	10' AND OVER

✳ - GUARDRAIL IS REQUIRED ON FILL SECTION

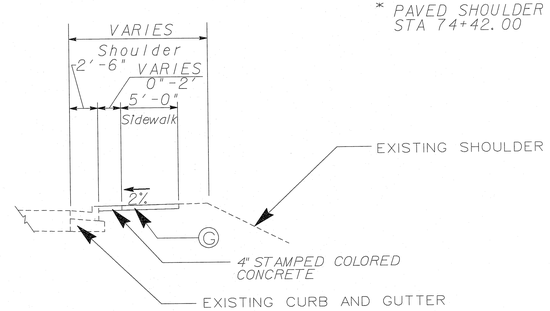

SIDEWALK EXTENSION DETAIL
STA 24+44.26 RT TO STA 27+00 RT
SHOWN
STA 25+78.10 LT TO STA 27+00 LT
SIMILAR
NO SCALE

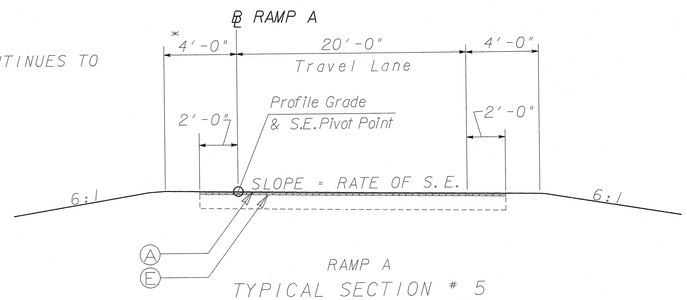

RAMP A
TYPICAL SECTION # 5
STA 72+50.00 TO STA 73+64.98
NO SCALE

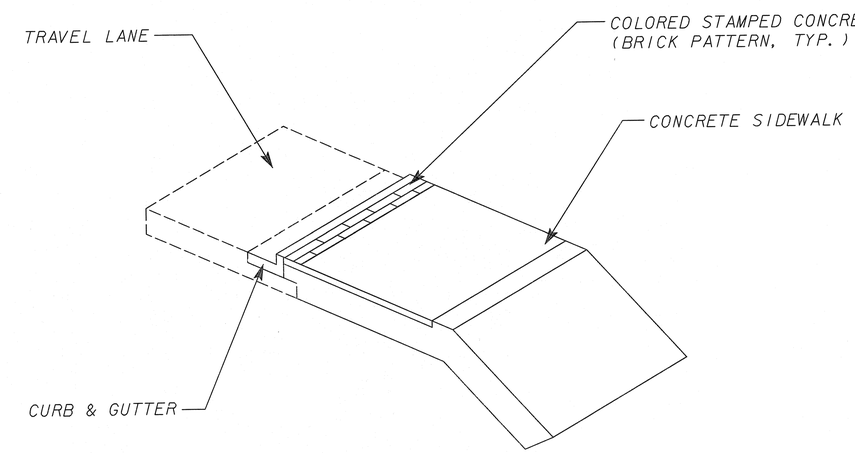

DETAIL FOR PLACEMENT OF TEXTURED STRIP (STAMPED CONCRETE)
N.T.S.

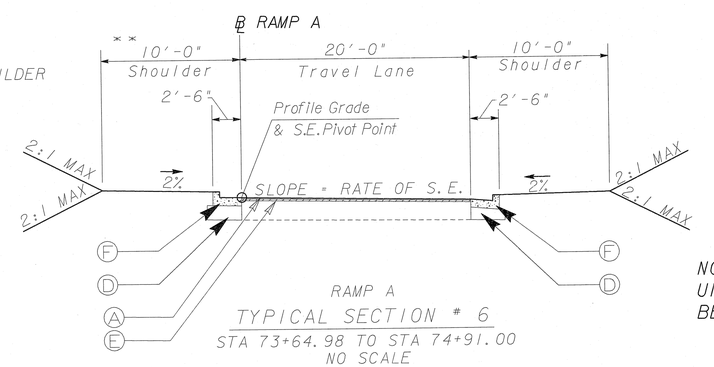

RAMP A
TYPICAL SECTION # 6
STA 73+64.98 TO STA 74+91.00
NO SCALE

* * CURB & GUTTER SHOULDER ENDS AT STA 74+42.00

REQUIRED PAVEMENT

- (A) RECYCLED ASPH CONC 12.5 mm SUPERPAVE, GP 2 ONLY, INCL BITUM & H LIME (165 LBS/SY)
- (D) GR AGGR BASE CRS, 4 INCH, INCL MATL
- (E) RECYCLED ASPH CONC LEVELING, INCL BITUM MATL & H LIME (AS DIRECTED BY THE ENGINEER)
- (F) CONC CURB & GUTTER, 8 IN X 30 IN, TP 2
- (G) CONC SIDEWALK, 4 IN
- (H) CONC CURB & GUTTER, 8 IN X 30 IN, TP 1
- (I) CONCRETE MEDIAN, 4 IN

NOTE: COLORED STAMPED CONCRETE SHALL BE MEASURED AND PAID FOR UNDER ITEM NUMBER 441-0740 CONCRETE MEDIAN, 4 IN. THE COLOR SHALL BE TILE RED, FEDERAL STANDARD 595B, COLOR #31310 OR EQUIVALENT.

REVISION DATES

Heath & Lineback Engineers
INCORPORATED
2390 CANTON ROAD, BUILDING 200
MARIETTA, GEORGIA 30066-5393

STATE OF GEORGIA
DEPARTMENT OF TRANSPORTATION
OPERATIONS DIVISION-OFFICE OF MAINTENANCE

TYPICAL SECTIONS

DISTRICT 7 BRIDGE JACKING
SR-139 (RIVERDALE RD) OVER I-285

DRAWING No. 05-02