COUNTY	PROJECT NUMBER	SHEET NO.	TOTAL SHEETS
CLAYTON	CSNHS-M000-00(331)	5	92

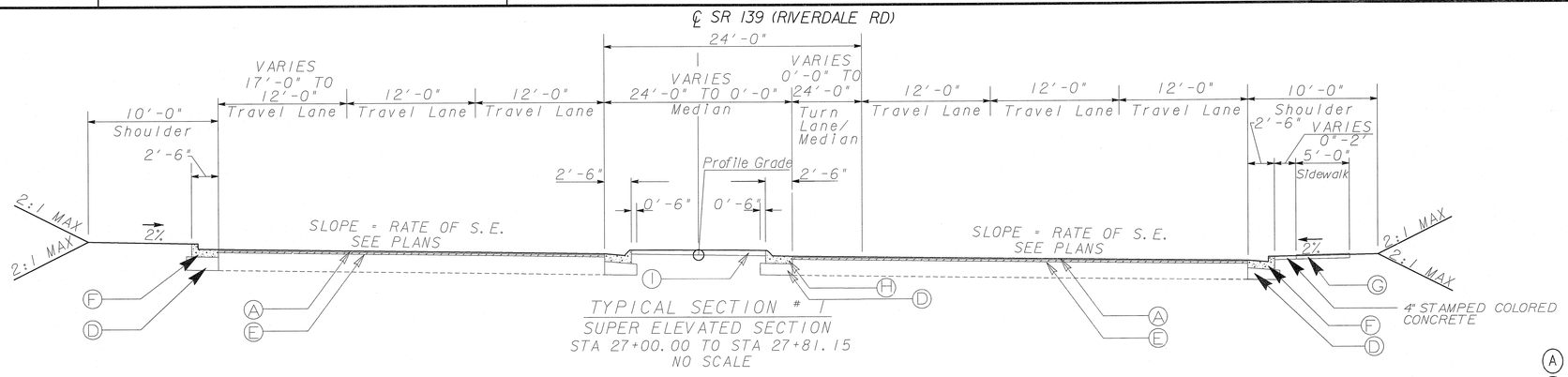

TYPICAL SECTION # 1
SUPER ELEVATED SECTION
STA 27+00.00 TO STA 27+81.15
NO SCALE

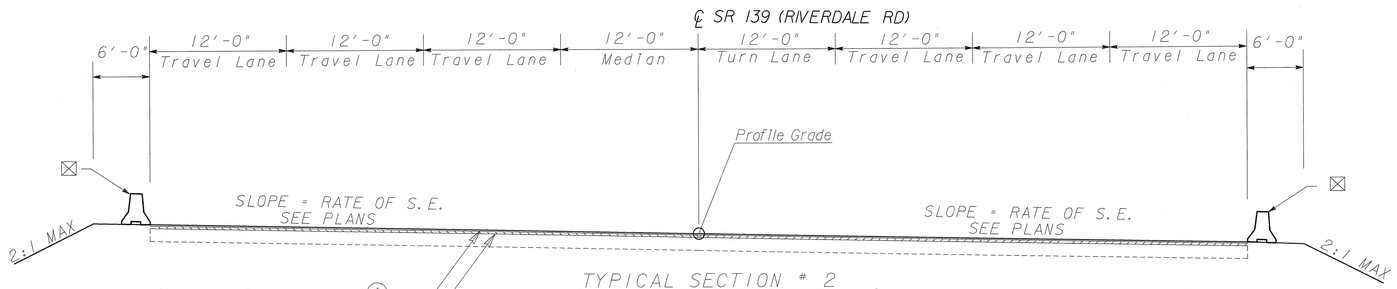

TYPICAL SECTION # 2
TEMPORARY PAVEMENT SECTION⊗
STA 27+86.15 TO STA 28+47.06
STA 31+38.65 TO STA 31+99.96
NO SCALE

⊠ TEMPORARY BARRIER METHOD I, AS DIRECTED BY THE ENGINEER

⊗ PAVEMENT TO BE REMOVED AFTER BRIDGE JACKING FOR CONSTRUCTION OF APPROACH SLAB AND CONCRETE OVERLAY

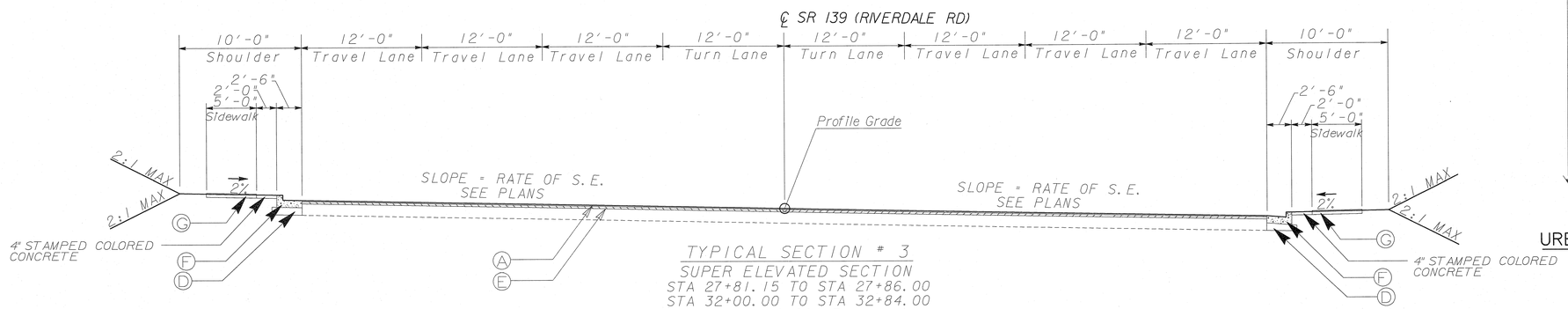

TYPICAL SECTION # 3
SUPER ELEVATED SECTION
STA 27+81.15 TO STA 27+86.00
STA 32+00.00 TO STA 32+84.00
NO SCALE

SEE SHEET 5-01 FOR S.E. TABLE

SLOPE CONTROL FILL & CUT	
SLOPE	HIGH FROM SHLD. PT.
4:1	0' - 10'
✱ 2:1	10' AND OVER

✱ - GUARDRAIL IS REQUIRED ON FILL SECTION

REQUIRED PAVEMENT

- (A) RECYCLED ASPH CONC 12.5 mm SUPERPAVE, GP 2 ONLY, INCL BITUM & H LIME (165 LBS/SY)
- (D) GR AGGR BASE CRS, 6 INCH, INCL MATL
- (E) RECYCLED ASPH CONC LEVELING, INCL BITUM MATL & H LIME (AS DIRECTED BY THE ENGINEER)
- (F) CONC CURB & GUTTER, 8 IN X 30 IN, TP 2
- (G) CONC SIDEWALK, 4 IN
- (H) CONC CURB & GUTTER, 8 IN X 30 IN, TP 7
- (I) CONCRETE MEDIAN, 4 IN

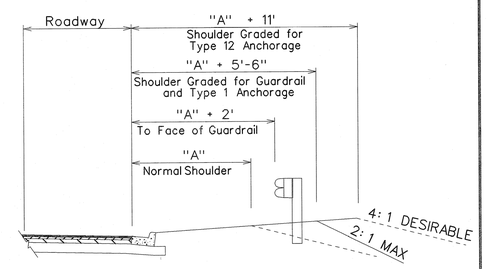

URBAN SHOULDER DETAIL FOR GUARDRAIL
SEE PLAN FOR LOCATION
SEE GA STD 4280 FOR DETAILS & CONSTRUCTION

Heath & Lineback Engineers INCORPORATED
2390 CANTON ROAD, BUILDING 200
MARIETTA, GEORGIA 30066-5393

REVISION DATES

STATE OF GEORGIA
DEPARTMENT OF TRANSPORTATION
OPERATIONS DIVISION-OFFICE OF MAINTENANCE

TYPICAL SECTIONS

DISTRICT 7 BRIDGE JACKING
SR-139 (RIVERDALE RD) OVER I-285

DRAWING No. 05-01