STATE	PROJECT NUMBER	SHEET NO.	TOTAL SHEETS
GA.	IM-M000-00 (283)	12	

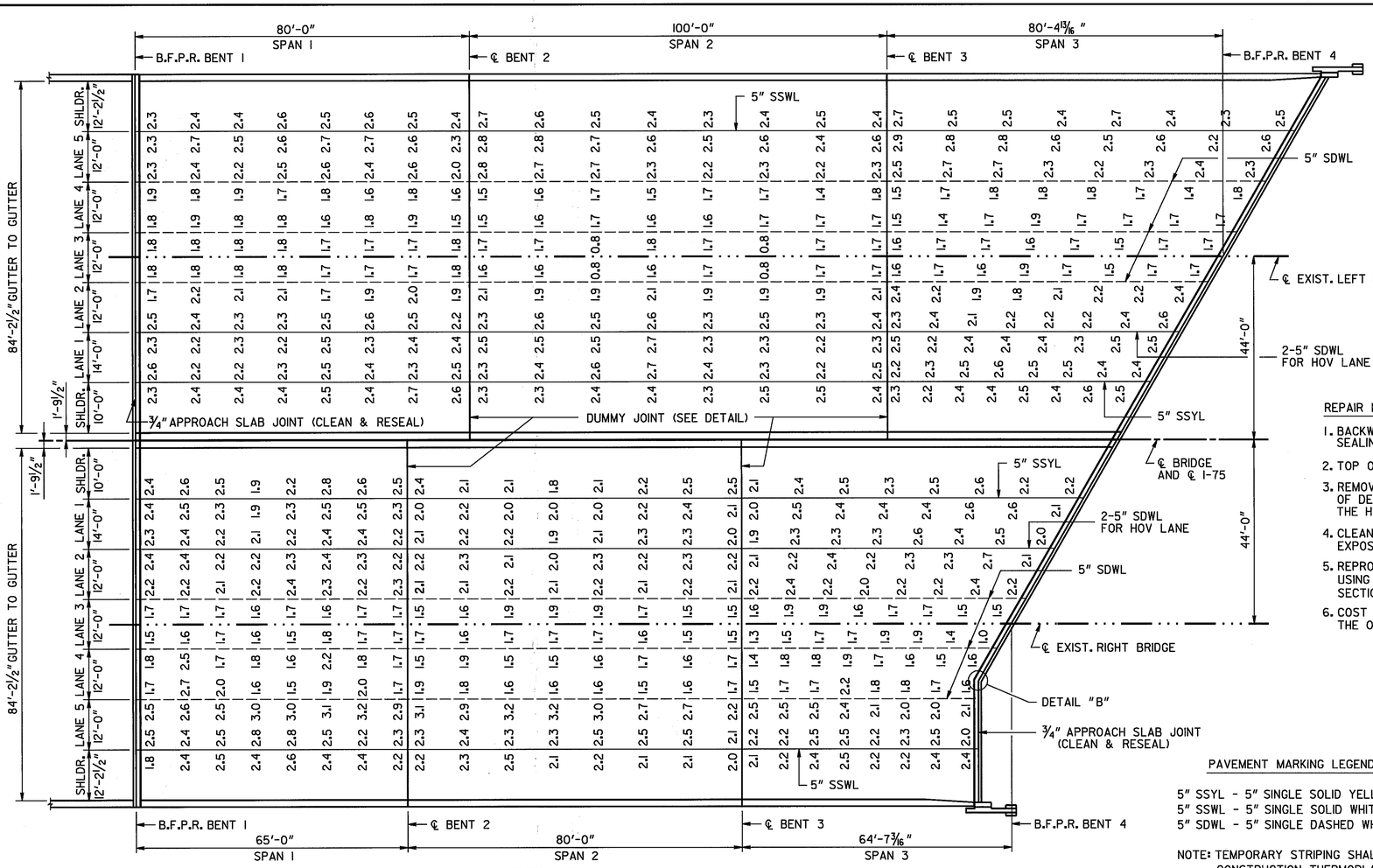

DECK PLAN

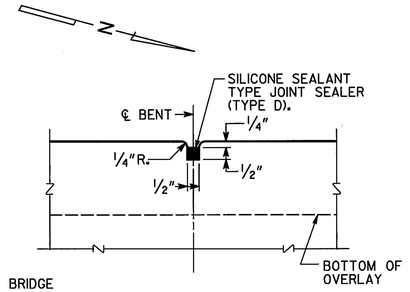

DUMMY JOINT DETAIL

NO SCALE

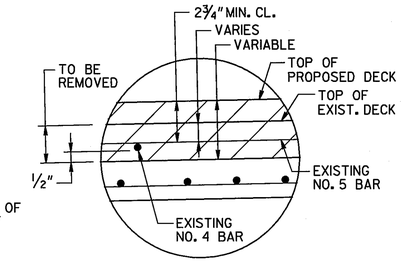

DETAIL "A"

REPAIR NOTES:

1. BACKWALL REPAIR SHALL BE COMPLETED PRIOR TO SEALING OF APPROACH SLAB JOINT.
2. TOP OF BACKWALL SHALL BE SAWCUT 1/2" MINIMUM.
3. REMOVE CONCRETE A MINIMUM 1" BEYOND THE LIMIT OF DETERIORATED CONCRETE AND 2" MINIMUM BELOW THE HORIZONTAL BACKWALL REINFORCEMENT.
4. CLEAN EXISTING REINFORCEMENT AND JOINT HARDWARE EXPOSED DURING CONCRETE REMOVAL.
5. REPROFILE TOP OF BACKWALL TO ITS ORIGINAL LIMITS USING RAPID SETTING CONCRETE IN ACCORDANCE WITH SECTION 435.01 OF THE GEORGIA DOT SPECIFICATIONS.
6. COST OF BACKWALL REPAIR SHALL BE INCLUDED IN THE OVERALL BID SUBMITTED.

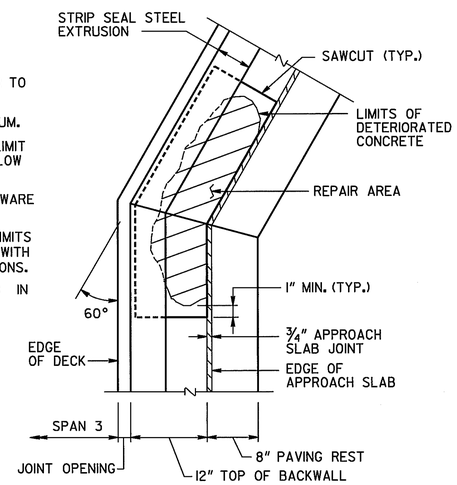

DETAIL "B"

PAVEMENT MARKING LEGEND

5" SSYL - 5" SINGLE SOLID YELLOW LINE
5" SSWL - 5" SINGLE SOLID WHITE LINE
5" SDWL - 5" SINGLE DASHED WHITE LINE

NOTE: TEMPORARY STRIPING SHALL BE USED DURING CONSTRUCTION. THERMOPLASTIC STRIPING SHALL BE DONE AFTER ALL DECK OVERLAY WORK IS COMPLETED. THE COST OF TEMPORARY STRIPING SHALL BE INCLUDED IN THE COST FOR TRAFFIC CONTROL.

NOTES :

1. DECK CLEARANCES ARE BASED ON COVER METER READINGS TAKEN BY THE GA. D.O.T. AND ARE GIVEN FOR INFORMATION ONLY. CONTRACTOR SHALL PERFORM THE WORK BASED ON ACTUAL EXISTING STEEL CLEARANCES.
2. EXISTING CLEARANCES SHOWN ARE IN INCHES AND ARE AT THE APPROXIMATE LOCATION OF THE COVER METER READINGS.

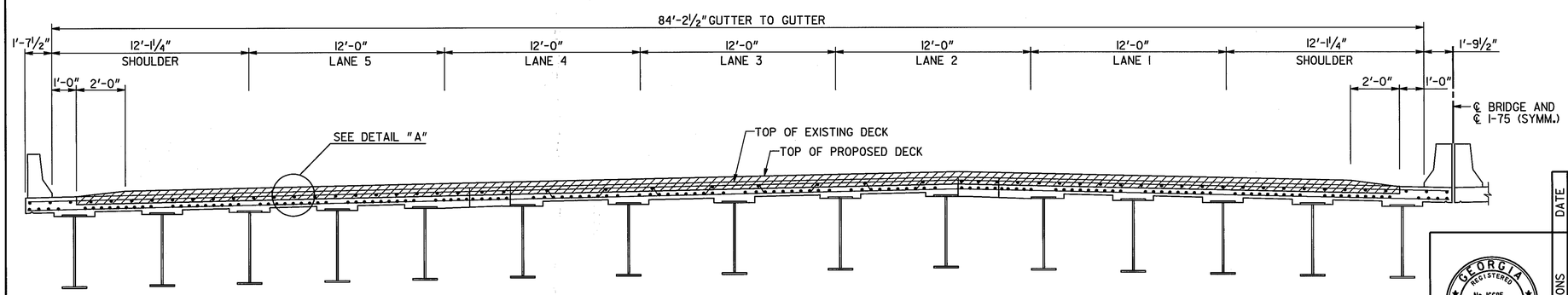

SECTION THRU SLAB

(LOOKING AHEAD)

BRIDGE NO. 4 LT. & RT.

J.B. Trimble, Inc.
6445 Powers Ferry Road
Atlanta GA 30339-2933
(770) 952-1022

GEORGIA
DEPARTMENT OF TRANSPORTATION
OPERATIONS DIVISION-OFFICE OF MAINTENANCE

DISTRICT 7 BRIDGE REPAIRS (DECK OVERLAY)

I-75 OVER NANCY CREEK

FULTON COUNTY IM-M000-00 (283)

SCALE: AS SHOWN MAY 2001

GEORGIA REGISTERED No. 16685 PROFESSIONAL ENGINEER SAMUEL E. POWELL JR. 5-25-01

BY	REVISIONS	DATE

BRIDGE SHEET 2 OF 2

DESIGNED MDT	CHECKED GLE	REVIEWED EHG
DRAWN ITD	DESIGN GROUP MAINTENANCE	APPROVED STH

C:\DGN\ 2019\CT2\BOL2-4DK.DGN 2-17-01 ITD

2/19/2008 12:47:00 PM \\GDOT-DSN1\GOPLOT\OCE\Road Design Tiff-18x12 to Tiff-36x24.gcf wnguyen C:\Documents and Settings\wnguyen\Desktop\M000283\Construction\Plan Sheet\M000283 0012.tif GO-RD-Plans-Review