STATE	PROJECT NUMBER	SHEET NO.	TOTAL SHEETS
GA.	IM-M000-00 (283)	6	

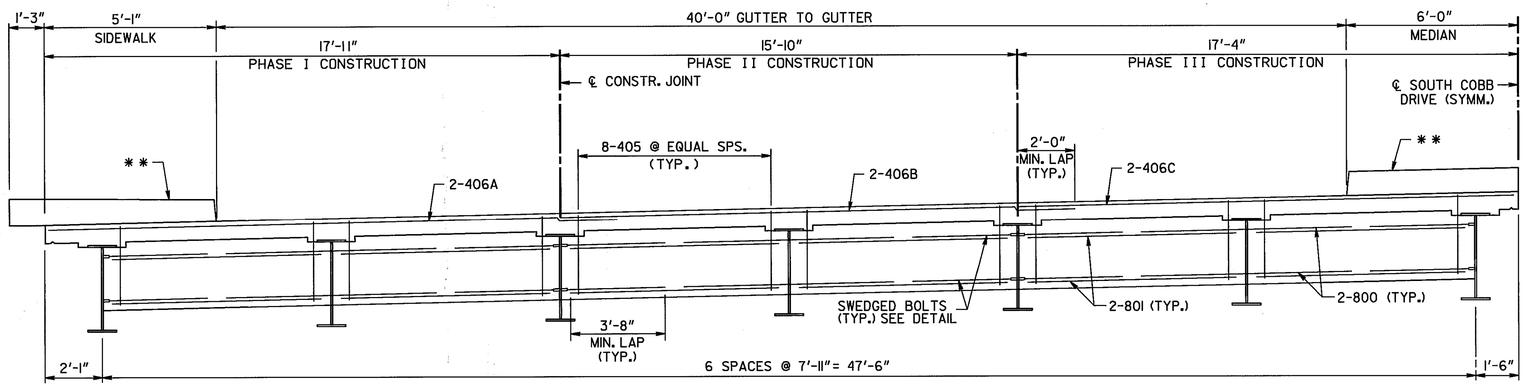

* * REMOVE SIDEWALK AND MEDIAN CONCRETE IN AREA OF SLAB REMOVAL. PRESERVE EXISTING REINFORCEMENT. CAST SIDEWALK AND MEDIAN TO ORIGINAL LIMITS WITH SLAB AND EDGE BEAM REPLACEMENT.

SECTION AT EDGE BEAMS

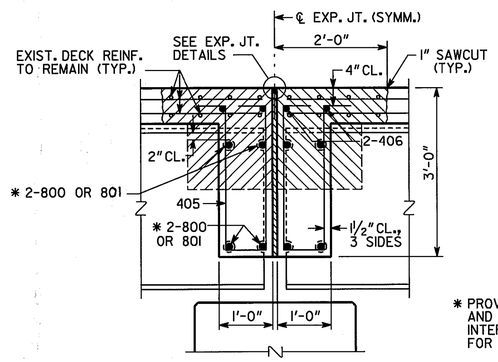

SECTION THRU EDGE BEAM

(BENTS 2 THROUGH 4)

* PROVIDE HOLES AND SLOTS IN INTERIOR BEAMS FOR #8 BARS.

DENOTES CONCRETE TO BE REMOVED

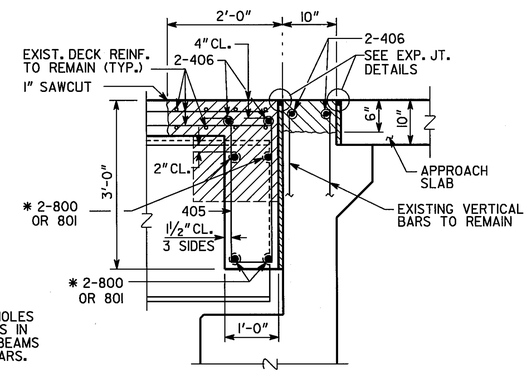

SECTION THRU EDGE BEAM

(BENTS 1 & 5)

CONSTRUCTION SEQUENCE

1. PLACE TEMPORARY TRAFFIC CONTROL MEASURES FOR PHASE I CONSTRUCTION. MAINTAIN TWO LANES OF TRAFFIC IN EACH DIRECTION.
2. SAWCUT AND REMOVE EXISTING DECK SLAB, SIDEWALK, MEDIAN AND BACKWALL CONCRETE TO LIMITS SHOWN ON PLANS.
3. REMOVE EXISTING EDGE BEAMS.
4. CLEAN EXISTING DECK AND BACKWALL REINFORCEMENT TO REMAIN IN PLACE.
5. PLACE NEW EDGE BEAM AND BACKWALL REINFORCEMENT.
6. FORM AND CAST EDGE BEAM, DECK SLAB, SIDEWALK, MEDIAN AND BACKWALL CONCRETE.
7. REPEAT STEPS 1 THROUGH 6 FOR PHASE II AND PHASE III CONSTRUCTION.
8. COMPLETE DECK OVERLAY AND JOINT SEALING OPERATIONS.

LOCATION	NO. OF LOC.	MARK	LENGTH FT.	LENGTH IN.	NO. BARS REQ'D.	TYPE	AG		B FT.	B IN.	C FT.	C IN.	D FT.	D IN.
BT 1 & 5	2													
LT OR RT		405	6- 8		48	31	4	4	0- 9		2- 7		2- 7	
		406A	20- 0		4	1								
		406B	17- 11		4	1								
		406C	17- 0		4	1								
		800	7- 8		12	1								
		801	7- 7		24	1								
BT 2, 3 & 4	3													
LT OR RT		405	6- 8		96	31	4	4	0- 9		2- 7		2- 7	
		406A	20- 0		4	1								
		406B	17- 11		4	1								
		406C	17- 0		4	1								
		800	7- 8		24	1								
		801	7- 7		48	1								

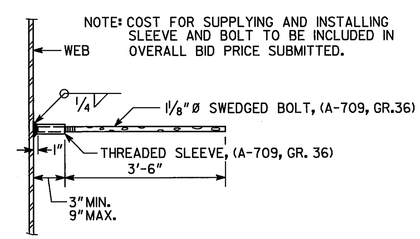

NOTE: COST FOR SUPPLYING AND INSTALLING SLEEVE AND BOLT TO BE INCLUDED IN OVERALL BID PRICE SUBMITTED.

EDGE BEAM BAR LAP DETAIL

BRIDGE NO. 1 LT. & RT.

JBT J.B. Trimble, Inc.
6445 Powers Ferry Road
Atlanta GA 30339-2933
(770) 952-1022

GEORGIA
DEPARTMENT OF TRANSPORTATION
OPERATIONS DIVISION-OFFICE OF MAINTENANCE

DISTRICT 7 BRIDGE REPAIRS (DECK OVERLAY)
S.R. 280 (SOUTH COBB DRIVE) OVER I-285
COBB COUNTY IM-M000-00 (283)

GEORGIA REGISTERED No. 16680 PROFESSIONAL ENGINEER SAMUEL L. POWELL, JR.
5-25-01

BY	REVISIONS	DATE

SCALE: AS SHOWN MAY 2001

BRIDGE SHEET 3 OF 3

DESIGNED MDT CHECKED GLE REVIEWED EHG
DRAWN ITD DESIGN GROUP MAINTENANCE APPROVED STH

C:\DGN\ 2019\CT2\BOL2-IDS.DGN 2-17-01 ITD

2/19/2008 12:47:18 PM \\GDOT-DSN1\GOPLOT\QCF\Road Design Tiff-18x12 to Tiff-36x24.qcf wnguyen C:\Documents and Settings\wnguyen\Desktop\M000283\Construction\Plan Sheet\M000283 0006.tif GO-RD-Plans-Review