STATE	PROJECT NUMBER	SHEET NO.	TOTAL SHEETS
GA.	IM-M000-00 (282)	24	26

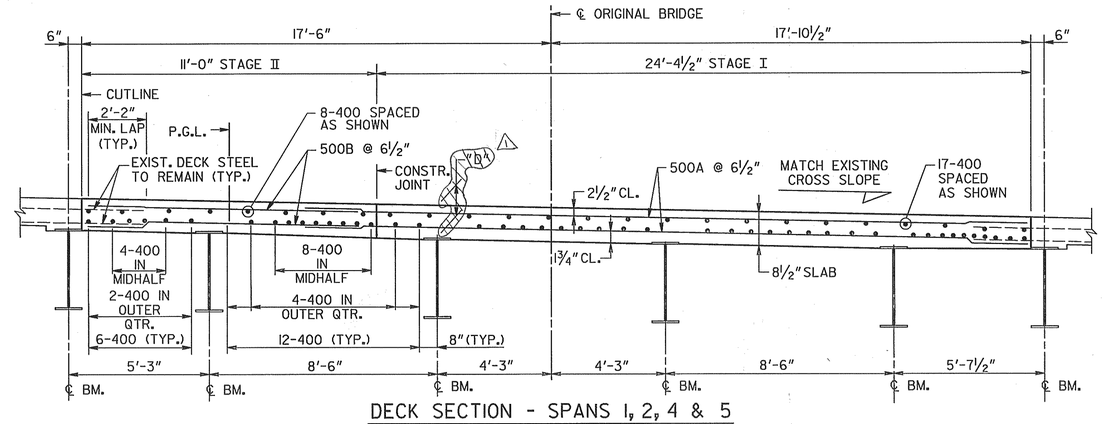

DECK SECTION - SPANS 1, 2, 4 & 5

(LOOKING AHEAD)

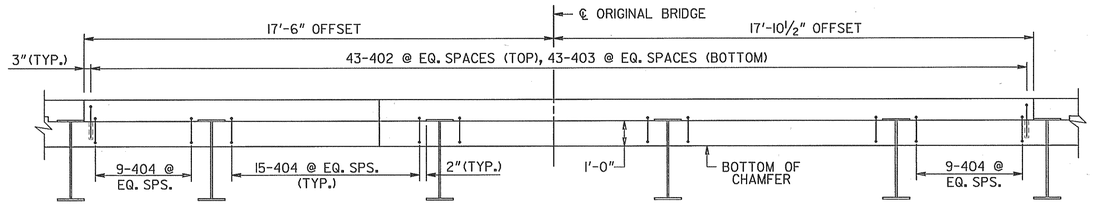

SECTION @ ENDWALL - SPANS 1, 2, 4 & 5

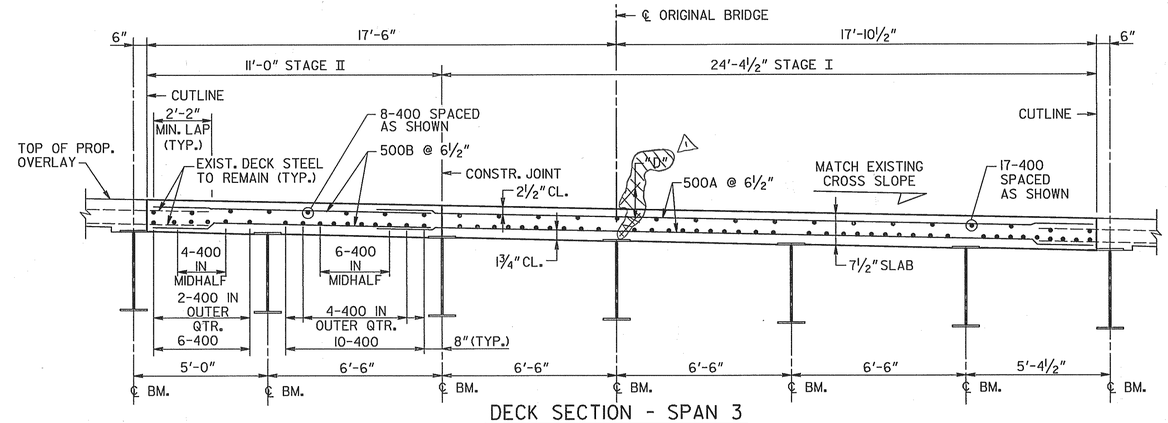

DECK SECTION - SPAN 3

(LOOKING AHEAD)

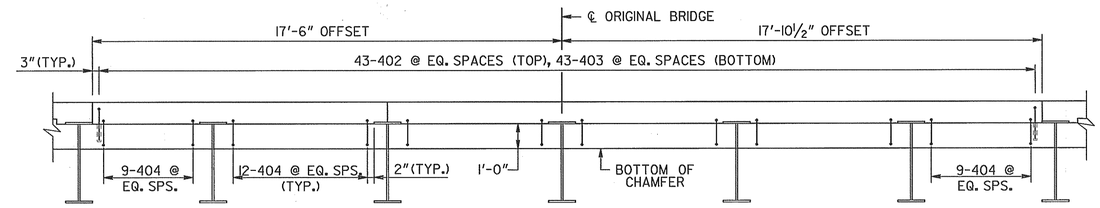

ENDWALL SECTION - SPAN 3

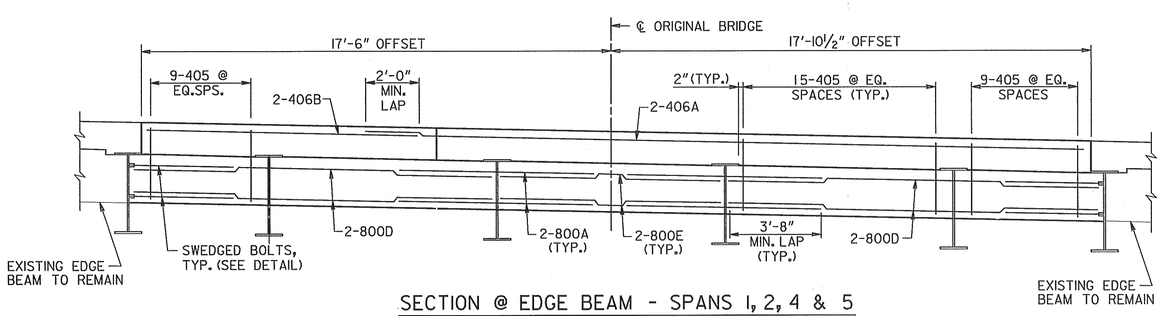

SECTION @ EDGE BEAM - SPANS 1, 2, 4 & 5

(LOOKING AHEAD)

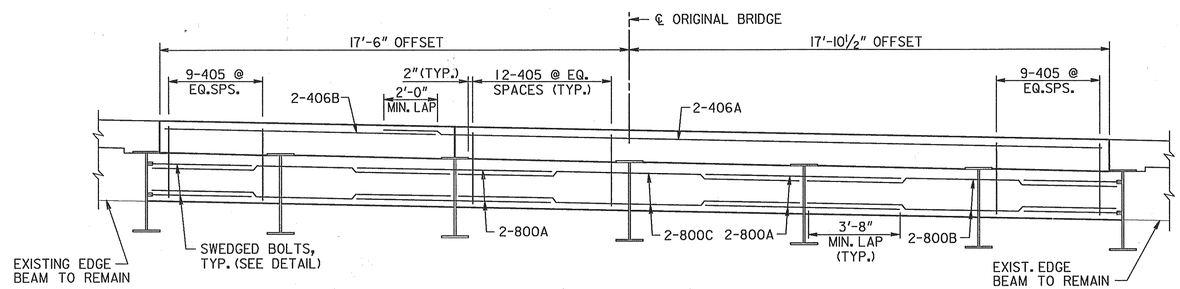

EDGE BEAM SECTION - SPAN 3

(LOOKING AHEAD)

BRIDGE NO. 1LT. & RT.

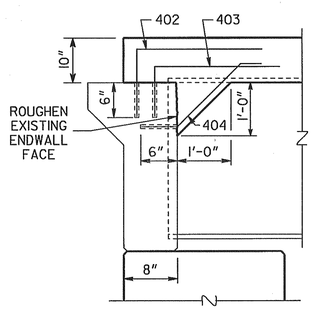

SLAB REINFORCEMENT NOT SHOWN.

SECTION THRU ENDWALL

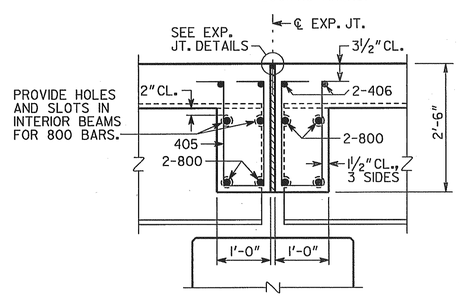

SLAB REINFORCEMENT NOT SHOWN.

SECTION THRU EDGE BEAM

NOTE:
COST FOR SUPPLYING AND INSTALLING SLEEVE AND BOLT TO BE INCLUDED IN OVERALL BID PRICE SUBMITTED.

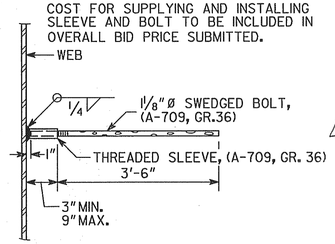

EDGE BEAM BAR LAP DETAIL

NOTES

1. CLEARANCE OF REINFORCEMENT IS 2" UNLESS NOTED OTHERWISE.
2. CARE SHALL BE EXERCISED IN REMOVAL OF EXISTING CONCRETE TO MAKE CUTS VERTICAL AND TO RETAIN EXISTING REINFORCEMENT. EXISTING REINFORCEMENT BARS TO BE SPLICED INTO NEW WORK SHALL EXTEND A MINIMUM OF 1'-10" INTO NEW SECTION. ANY EXISTING REINFORCEMENT STEEL DAMAGED DURING REMOVAL SHALL BE REPLACED BY THE CONTRACTOR AT NO ADDITIONAL COST.
3. NON-CONTACT LAPS MAY BE USED BETWEEN EXISTING AND NEW TRANSVERSE DECK BARS.
4. ~~DIMENSION "D" IS MEASURED FROM TOP OF SLAB TO TOP OF BEAM AT CENTERLINE OF BEARING. VARY "D" BETWEEN BEARINGS TO COMPENSATE FOR DEAD LOAD DEFLECTION AND VERTICAL CURVE. MAINTAIN CONSTANT SLAB THICKNESS AS SHOWN IN SECTIONS.~~
   ~~"D" = 6½" (SPAN 3)~~
   ~~"D" = 7½" (SPAN 1, 2, 4 & 5)~~
5. CONCRETE FOR DECK REPLACEMENT SHALL BE 24 HOUR ACCELERATED STRENGTH CONCRETE IN ACCORDANCE WITH THE GEORGIA DOT SPECIFICATIONS, EXCEPT THE MAXIMUM AGGREGATE SIZE SHALL BE NO. 7 STONE.

GEORGIA REGISTERED No. 16685 PROFESSIONAL ENGINEER STEVE L. POWELL
08-29-01

BRIDGE SHEET 4 OF 4

REVISIONS	BY	DATE
NOTE REMOVED	GLE	09-27-01

JBT J.B. Trimble, Inc.
6445 Powers Ferry Road
Atlanta GA 30339-2933
(770) 952-1022

GEORGIA
DEPARTMENT OF TRANSPORTATION
OPERATIONS DIVISION-OFFICE OF MAINTENANCE

DISTRICT 6 BRIDGE REPAIRS (DECK REHABILITATION)

I-75 OVER NORFOLK SOUTHERN RAILWAY

WHITFIELD COUNTY IM-M000-00 (282)

SCALE: AS SHOWN JULY 2001

DESIGNED MDT	CHECKED GLE	REVIEWED EHG
DRAWN ITD	DESIGN GROUP MAINTENANCE	APPROVED STH

C:\DGN\ 2019\CTI\BOLI-2DS.DGN 5-25-01 ITD