ATE	PROJECT NUMBER	SHEET NO.	TOTAL SHEETS
GA.	IM-M000-00(282)	18	26

PRECAST CONCRETE BARRIER DETAILS

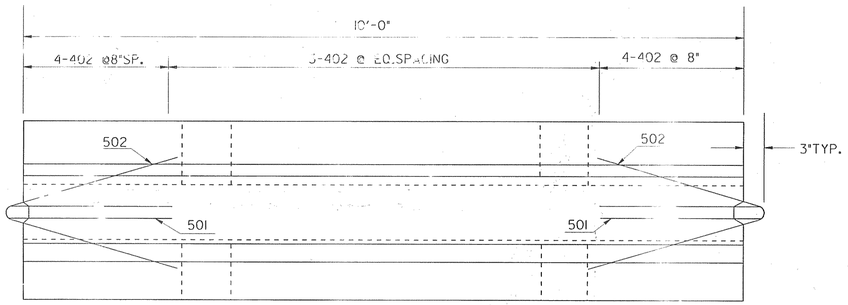

PLAN

NOTE:
BARRIER SECTIONS SHALL BE CONNECTED TOGETHER WITH THE 1¼" DIA. A-307 DOUBLE HEX CONNECTION BOLT. THE BOTTOM NUT & WASHER SHALL BE MAINTAINED BY THE CONTRACTOR FOR THE DURATION OF THE BARRIER INSTALLATION.

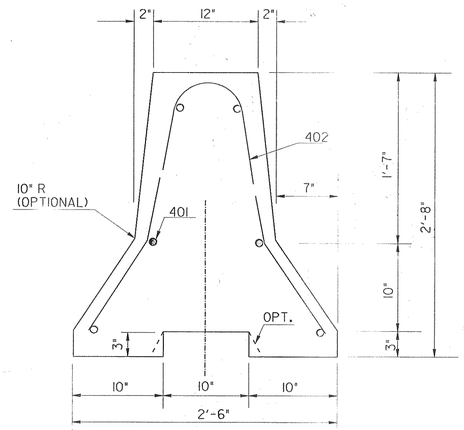

END ELEVATION

GENERAL NOTES:

1-MATERIALS: CLASS 'A' CONCRETE AN[illegible] STEEL.

2-SEE GA. SPECIFICATIONS FOR BASI[illegible] PAYMENT AND METHOD NO[illegible]

3-REINFORCEMENT, HAVING AN AREA [illegible] LEAST EQUAL TO REBARS SHOWN, MA[illegible] BE USED AS AN ALTERNATE

4-BARRIERS SHALL BE PLACED SUC[illegible] HAT OPENINGS BETWEEN INDIVIDUAL SECTIONS SHALL BE KEPT TO A [illegible]IMUM.

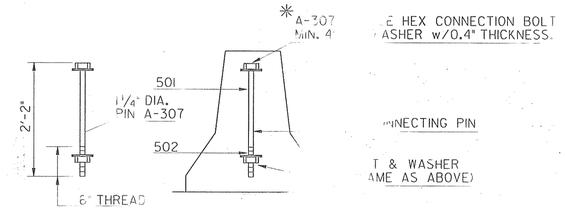

PIN CONNECTION

*AN ALTERNATE CONNECTING PIN WITH A [illegible]ED NUT ON THE TOP THREADED PORTION AND N[illegible] AND WASHER AS SPECIFIED ON THE BOTTOM MAY A[illegible] E USED.

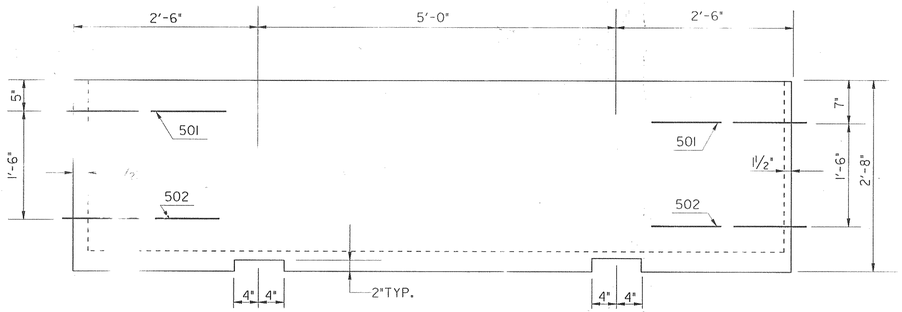

SIDE VIEW

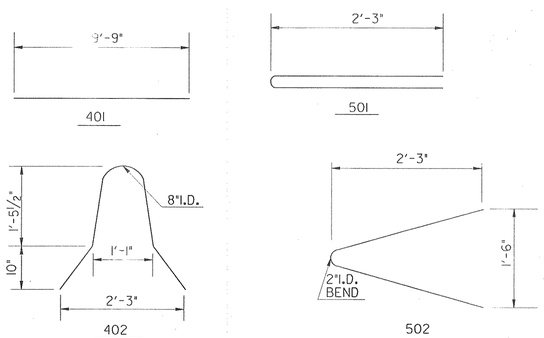

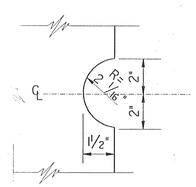

CAP DETAIL

DATE	DEPARTMENT OF TRANSPORTATION STATE OF GEORGIA	
REVISION	STANDARD DETAILS OF PRECAST TEMPORARY BARRIERS	
REV. REBAR & PIN CONN. / COTTER PIN REQUIREMENT	NO SCALE	AUG., 1995
BY R.M.U.	DES. ___ DRW. ___ TRA. ___ CHK. ___ (SUBMITTED) James A. Kennedy STATE ROAD & AIRPORT DESIGN ENGR. (APPROVED) [signature] CHIEF ENGINEER	NUMBER 4961