① BARRIER DELINEATIONS, OFFSETS, & FLARE RATES

NOTE:
STRIPED DRUMS WILL BE PROVIDED IN ADVANCE OF TEMPORARY CONCRETE BARRIER INSTALLATION AND WILL BE IN PLACE BEFORE THE BARRIER IS INSTALLED AND REMOVED AFTER THE BARRIER IS REMOVED.

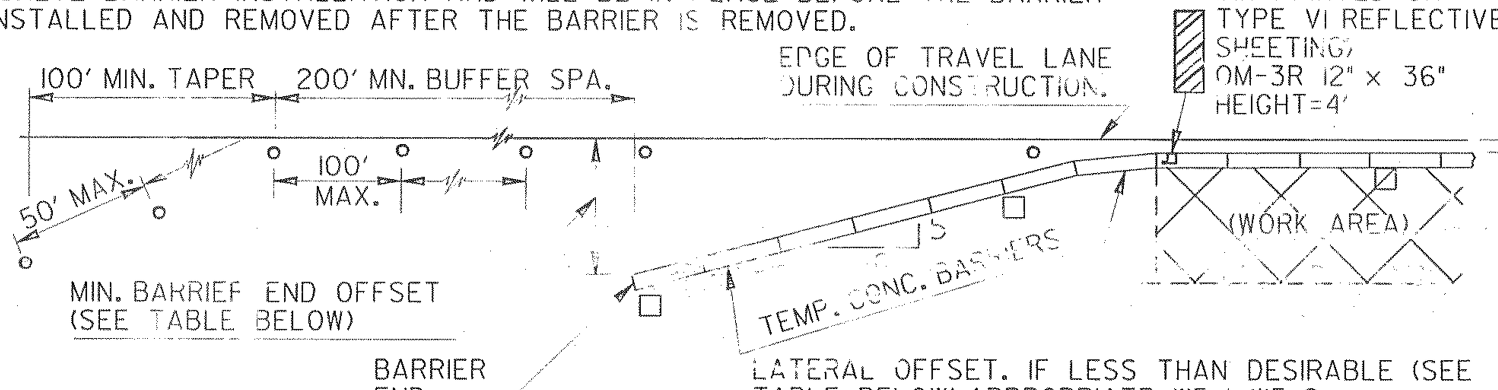

LEGEND

◎ - STRIPED DRUM

□ - 10"×10" YELLOW PANELS WITH TYPE V SHEETING- MIN. 50' SPACING

POSTED SPEED PRIOR TO WORK AREA	DESIRED MIN. LATERAL OFFSET (FT.)	FLARE RATE a/b(MIN.)	⊛MINIMUM OFFSET TO BARRIER END (FEET) A.D.T. (DURING CONSTRUCTION)			
			UNDER 750	750-1500	1500-6000	OVER 6000
30 MPH	3.5	7:1	7	10	12	14
40 MPH	5.0	9:1	10	10	14	16
50 MPH	6.5	11:1	12	14	16	18
60 MPH	8.0	13:1	16	19	22	26
70 MPH	10.0	15:1	18	24	28	30

NOTE: INTERMEDIATE SPEEDS MA UTILIZE AVERAGE VALUES.

⊛ WHERE CONDITIONS DO NOT ALLOW THE ABOVE BARRIER END OFFSETS, A TEMPORARY GUARDRAIL ANCHORAGE AT THE BARRIER END IS REQUIRED. IF INSTALLATION OF GUARDRAIL ANCHORAGE IS NOT PRACTICAL DUE TO LOCAL CONDITIONS, A TEMPORARY TRAFFIC IMPACT ATTENUATOR SAND LOADED MODULES, SHALL BE USED AT THE BARRIER END. IF NEITHER ANCHORAGE NOR SAND MODULE ATTENUATOR CAN BE PROVIDED, AN APPROVED PORTABLE ATTENUATOR IS REQUIRED. (SEE DETAIL BELOW.)

② MINIMUM BARRIER ADVANCEMENT LENGTH (WITH TEMPORARY GUARDRAIL ANCHOR OR ATTENUATOR.)

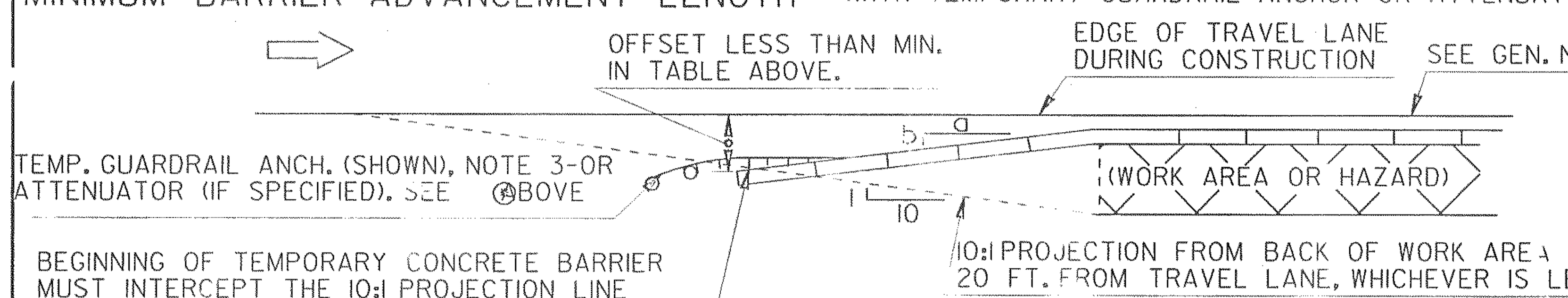

NOTE: TRAFFIC CONTROL DEVICES & OTHER DETAILS NOT SHOWN HERE WILL BE THE SAME AS SHOWN ABOVE.

TEMPORARY BARRIER TRANSI ON - CAST - IN - PLACE

(REQUIRED WHERE TEMPORARY BARRIER TTS AGAINST PERMANENT BARRIER)

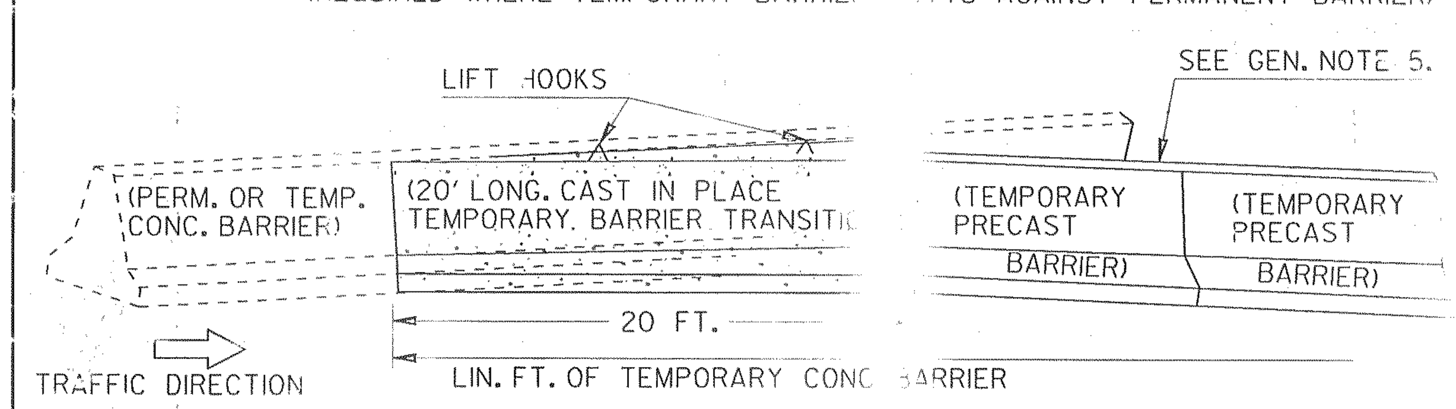

NOTES:
1. COVER PERMANENT BARRIER, PAVEMENT, & PRECAST SECTIONS WITH POLYETHYLENE AS A BOND BREAKER.
2. PLACE BARRIER SIDE FORMS AGAINST PERMANENT & TEMP. BARRIER TO FORM SMOOTH TRANSITION.
3. USE CLASS "A" CONCRETE, FORMS MAY BE REMOVED AFTER ONLY 2 HOURS, A TYPE I FINISH IS SUFFICIENT.
4. TRANSITION SHALL BE COMPLETED BEFORE TEMPORARY BARRIER IS EXPOSED TO ON-COMING TRAFFIC.
5. TRANSITION IS NOT REQ'D. AT TRAILING END OF ONEWAY FIC FLOW.
6. TRANSITION WILL BE PAID FOR AS PRECAST CONCRETE BARRIER, METHOD 1 OR 2. PAYMENT INCLUDES REUSE, REMOVAL, AND DISPOSAL. TRANSITIONS FOR METHOD 2 WILL BE PROVIDED BY THE CONTRACTOR WITH PAYMENT MADE AT THE CONTRACT PRICE FOR METHOD 2.

③ TEMPORARY TRAFFIC IMPACT ATTENUATOR (40 MPH) (SAND LOADED MODULES)

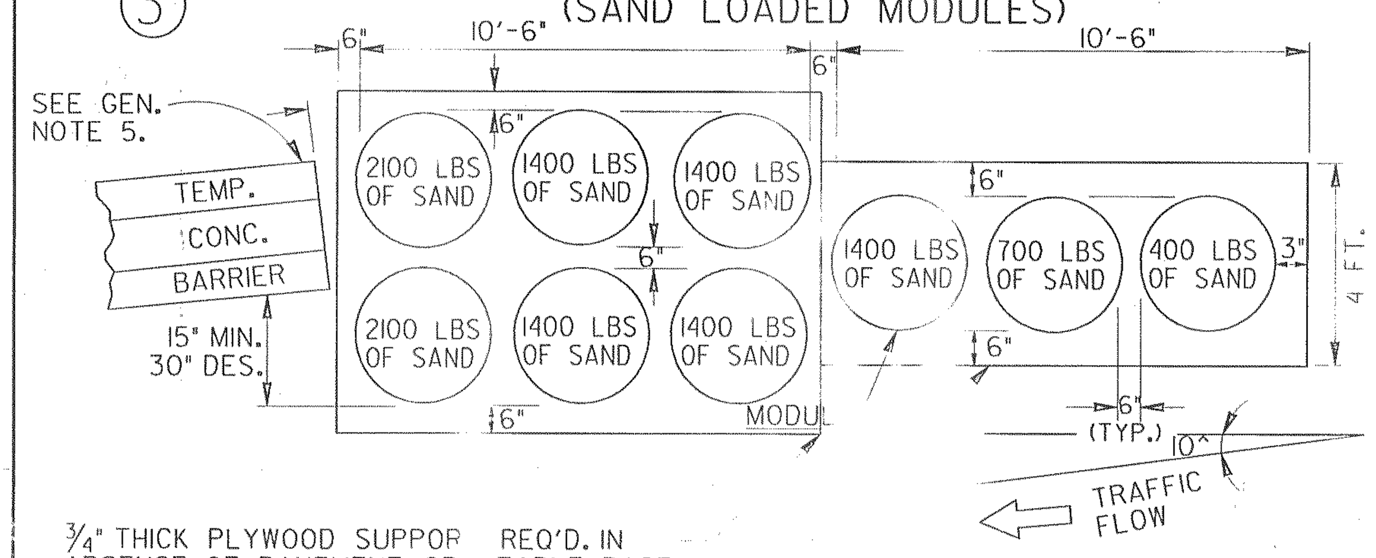

¾" THICK PLYWOOD SUPPOR REQ'D. IN ABSENCE OF PAVEMENT OR STABLE BASE.

NOTES:
1. ATTENUATOR SHALL BE ANGLED AT 10 DEGREES OF TRAVEL LANE.
2. DO NOT USE ARRAY AS SHOWN ABOVE IN GORE AREA
3. USE OF TEMPORARY ATTENUATOR OR TEMP. GUARDRA NCHORAGE IS WHERE BARRIER END IS WITHIN THE MINIMUM OFFSET AS SPECIFIED AT
4. FOR POSTED SPEEDS GREATER THAN 40 MPH, SEE 962.

RTABLE ATTENUA TE NAL

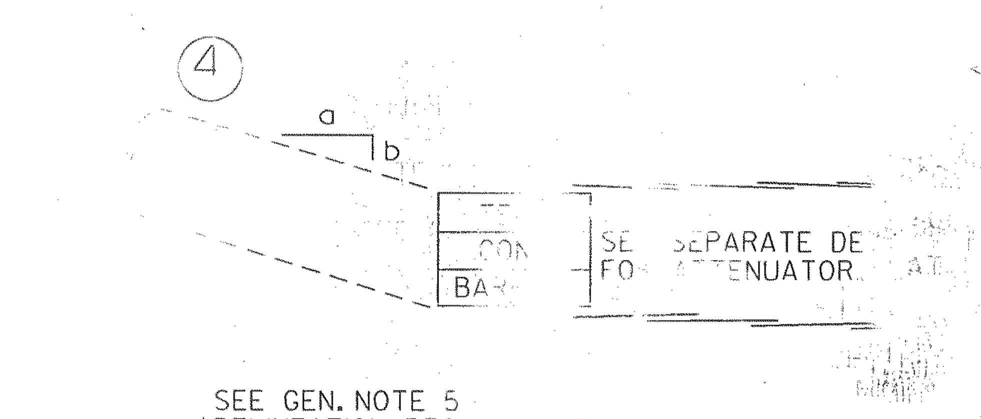

SEE GEN. NOTE 5 DELINEATION REQ NT.

TE: WHERE GUARDRAIL ATTENUATOR IS SP EE SECTION 65 FOR SPECIFICATION CONSTRUCTION DET PPLICABLE DET

BAR R TERMINAL END TREATMEN

① = FIRST TI MUM OFFSET IS OBTAINED.

② = SECOND OPTION, TEMPORARY GUARDRA ANCHORAGE, AS SPE

③ = THIRD TION, TEMPORARY (SAND MODULES) ATTENUATOR.

④ = FOUR OPTION, PORTABLE ATTEN OR.

NOTE: AT APPLICABLE LOCATIONS, BARR ND MAY BE TERMINATE AST-IN-F S TION (TOP MIDDLE) OR CONNECTE GUARDRAIL (BOT. MIDDL NS OF THE (

TEMPORARY CONCRETE BARRIER/GUARDRAIL CONNECTIONS & JUNCTIONS

NOTE:
PAYMENT FOR TEMPORARY CONCRETE BARRIER WILL INCLUDE ALL SPECIAL END SHOES, BOLTS, BOLT HOLES, NUTS, WASHERS, ADDITIONAL GUARDRAIL POSTS, ETC., NECESSARY FOR THE CONNECTIONS, AS SHOWN, WHEN REQUIRED.

ALL SPECIAL END SHOES WILL BE CONNECTED TO CONCRETE BARRIER WITH FOUR ⅞" DIA. BOLTS (A.S.T.M. A-307). LOCATION OF THE BOLTS. MAY BE VARIED AT THE DIRECTION OF THE ENGINEER. REMOVABLE TYPE ⅞" DIA. CONCRETE ANCHOR BOLTS, INSTALLED ACCORDING TO MANUFACTURER'S RECOMMENDATIONS, MAY BE USED INSTEAD OF THE BOLTS CONNECTION SYSTEM SHOWN. ANY BOLTS BROKEN OR IMPROPERLY INSTALLED WILL BE CAUSE FOR REJECTION.

∇ INDICATED CONNECTIONS MAY BE VARIED PROVIDED THAT THE ⅞" DIA. BOLTS MISS THE BARRIER REINFORCING.

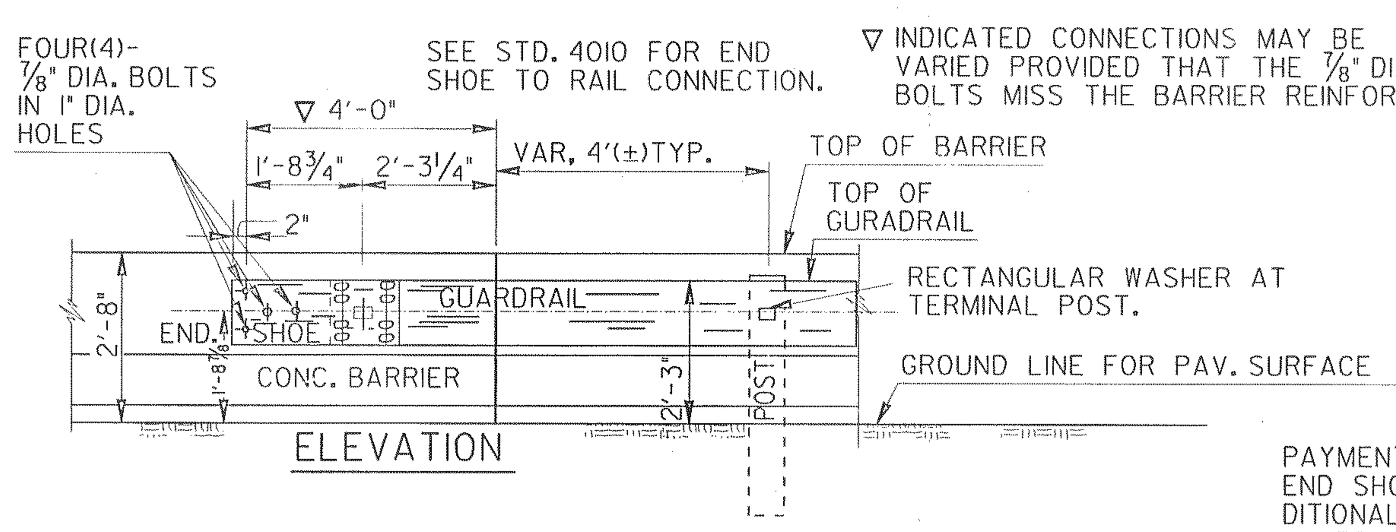

ELEVATION

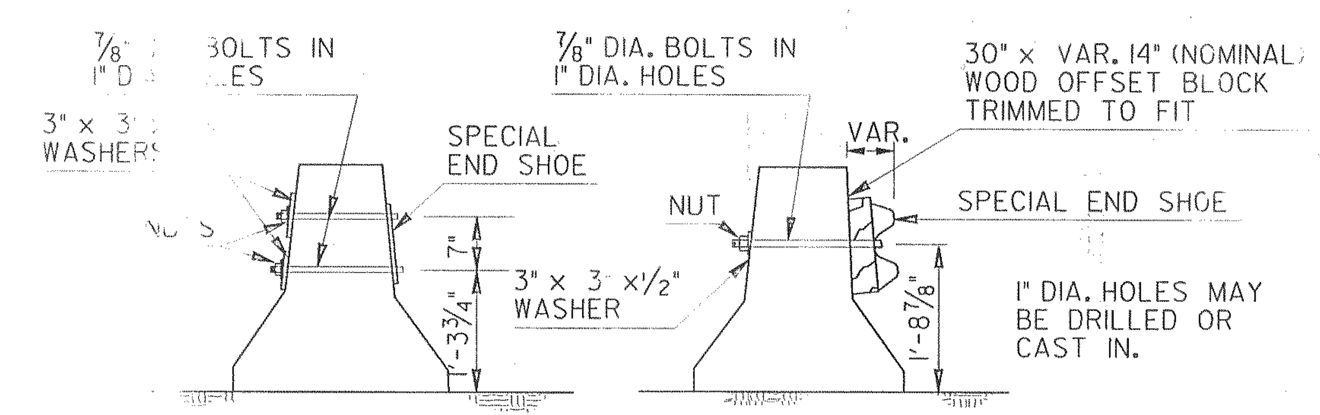

SECTION A-A

SECTION B-B

— SPECIAL NOTE: —
PAYMENT FOR TEMP. GUARDRAIL ANCHORAGE INCLUDES END SHOE, CONNECTING BOLTS, NUTS & WASHERS, ADDITIONAL POSTS & OFFSET BLOCKS, 25 FT. ADDITIONAL "W"-BEAM WITH THE DBL. NESTED SECTION PLUS STANDARD ANCHORAGE COMPONENTS. (TOTAL LENGTH=67'(+).

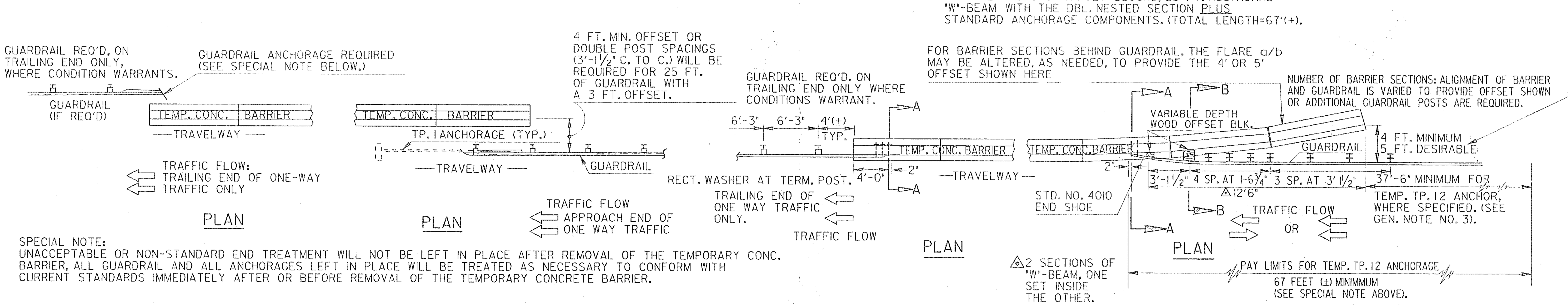

SPECIAL NOTE:
UNACCEPTABLE OR NON-STANDARD END TREATMENT WILL NOT BE LEFT IN PLACE AFTER REMOVAL OF THE TEMPORARY CONC. BARRIER, ALL GUARDRAIL AND ALL ANCHORAGES LEFT IN PLACE WILL BE TREATED AS NECESSARY TO CONFORM WITH CURRENT STANDARDS IMMEDIATELY AFTER OR BEFORE REMOVAL OF THE TEMPORARY CONCRETE BARRIER.

ERAL NOTES:

1. BARRIERS BE PLACED SUCH THAT OPENINGS BE N INDIVIDUA SECTIC SHALL BE KEPT TO A MINIMUM.
HE BARRIER IS NOT TO BE CONNECTED HE BRIDGE DECK BY CONNE TING PINS OR REBARS.
HERE EMPORARY GUARDRAIL ANCHORAGE IS SPECIFIED, THE FIRS BREAKAWAY POST SHALL BE 37 6" MINIMUM N ADVANCE OF BE NG TEMPORARY CONCRETE BARRIER NSTALLATION.
4. PRECAST BARRIER SECTIONS SHAL BE OF REQUIRED CONSTRUCTIO ACCOR TO STD. 4961.
5. STRIPED DRUMS, OBJECT MARKERS, ETC. SHOWN FOR OPTION 1 S BE APPLICABLE FOR THE OTHER OP ONS AS WELL. TRAFFIC CONTR NOT SHOW ON THIS STANDARD SHALL BE IN ACCORDANCE WITH CURRENT ON OF SECTION 150 AND SEPARATE ST NDARDS, CONSTRUCTION DETAI ND/OR PLAN SHEETS.
6. ALL JOINTS BETWEEN PRECAS ARRIER SECTIONS WILL BE CON WI EITHER A HOOKED REBAR OR IN ASSEMBLY. (SEE STD 4961).

2-1-01	O.M. SH. SPEC.	RMU
DATE	REVISION	BY

DEPARTMENT OF TR SPORTATION
STATE OF GEO A

STANDARD

CONCRETE BARRIER TEMPORARY (END TREATMENT OPTIONS)

NO SCALE — REV. & REDR. MAY, 1999

DES. ___ TRA. ___ CHK. ___

(SUBMITTED) James A. Kennel — STATE ROAD & AIRPORT DESIGN ENGR.

(APPROVED) [signature] — CHIEF ENGINEER

NUMBER 4960