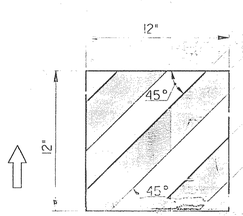

NOSE STRIPING DETAIL

BLACK GLOSS ENAMEL INK SCREEN PRINTED ON PRESSURE SENSITIVE ENGINEER GRADE REFLECTIVE SHEETING, TP. I, LEVEL 'A'. (SECTION 913

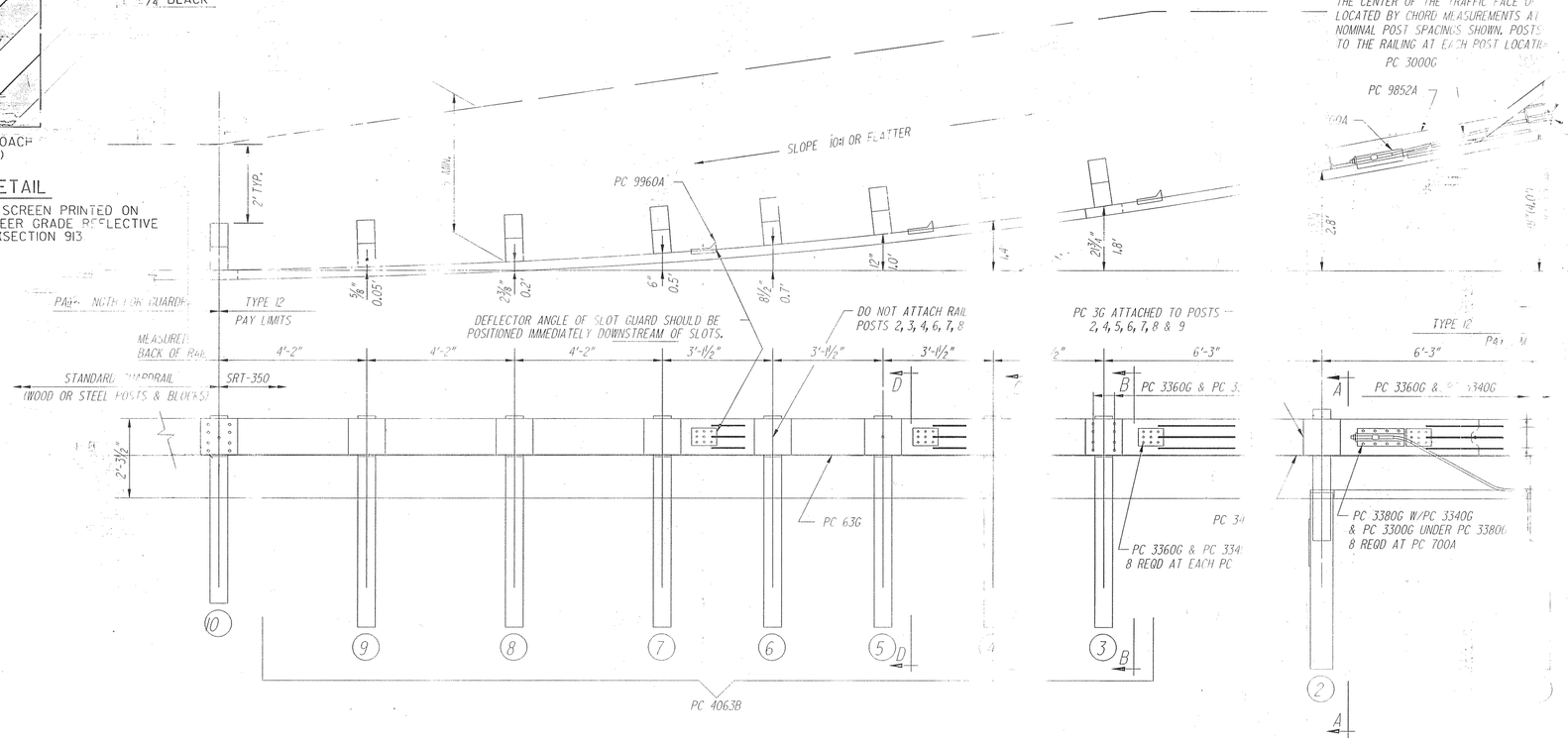

OFFSET NOTE:
THE POST OFFSET DIMENSIONS ARE FROM OF THE BLOCKOUT, EXCEPT AT THE THE CENTER OF THE TRAFFIC FACE OF LOCATED BY CHORD MEASUREMENTS AT NOMINAL POST SPACINGS SHOWN. POSTS TO THE RAILING AT EACH POST LOCATE

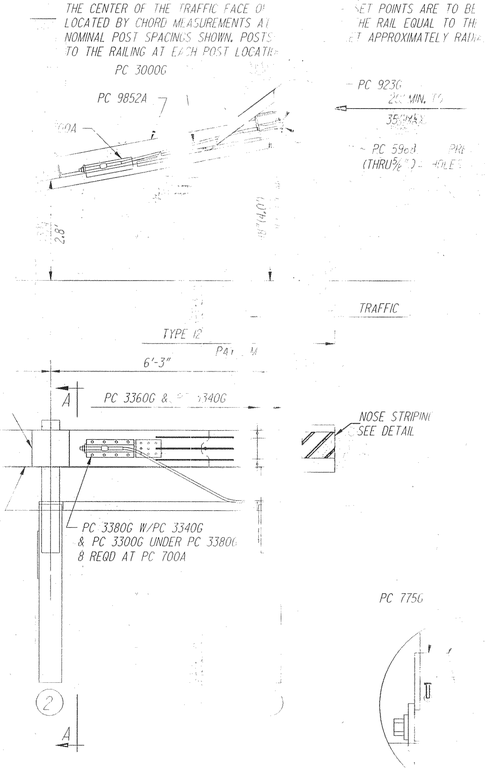

30	
34	
63	
700A	
705	
736G	
766G	
775G	
923G	
3000	
3300	
3320	
3340	
3360	
3380	
3413	

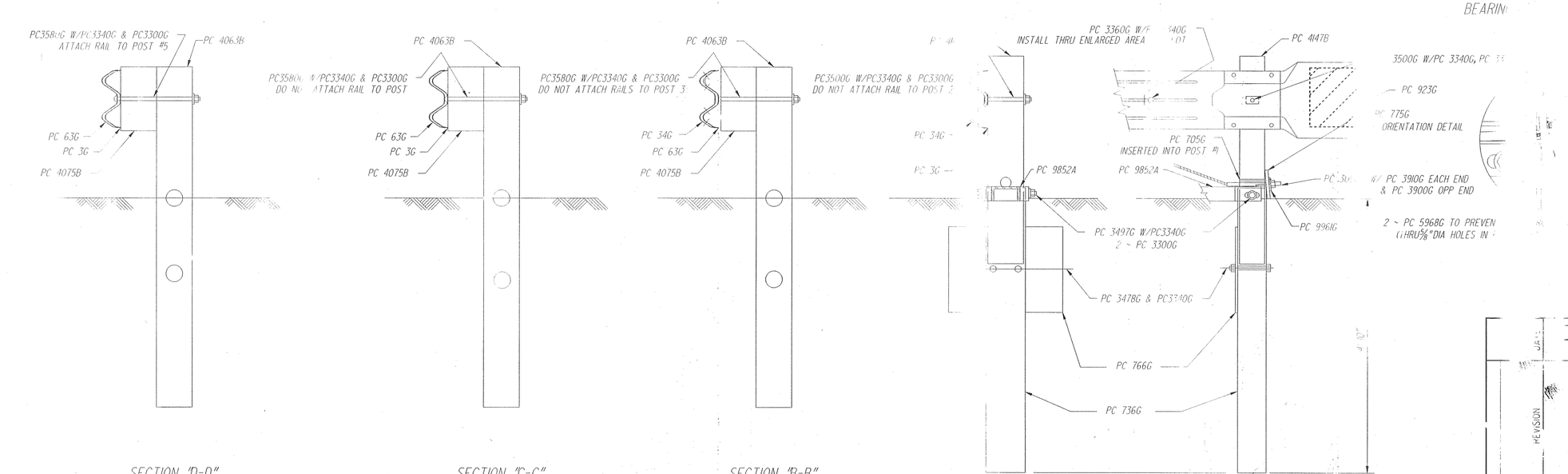

SECTION "D-D" (@ POST #5)

SECTION "C-C" (@ POSTS #4, #6, #7, #8 & #9)

SECTION "B-B" (@ POST #3)

SECTION "A-A" (@ POST #2)

ENLARGED VIEW @ POST #1

NOTE

GUARDRAIL SHOULD BE TYPE 12 WILL BE THE STANDARD OR EQUAL ALTERNATE MAY BE USED TO THE DOT FOR APPROVAL. THE 12 ANCHORAGES SHALL MEET SRT 350 REQUIREMENTS.

DETAILS SHOWN WILL BE ACCORDING TO THE MANUFACTURERS REQUIREMENTS AND AS APPROVED BY THE ENGINEER. THE CONTRACTOR SHALL OBTAIN A COPY OF THE MANUFACTURER'S INSTALLATION INSTRUCTIONS.

DEPARTMENT OF TRANSPORTATION
STATE OF GEORGIA

STANDARD

GUARDRAIL ANCHORAGE TYPE 12

JULY 1997

DES.	(SUBMITTED)	DESIGN ENGR.	NUMBER
DRW.			4040
TRA.	(APPROVED		
CHK.		CHIEF ENGINEER	

REVISION