TYPE A WOOD POST (FOR "W" BEAM GUARDRAIL)

NOTE: WOOD POST ARE ALLOWABLE ONLY WHERE SPECIFIED.

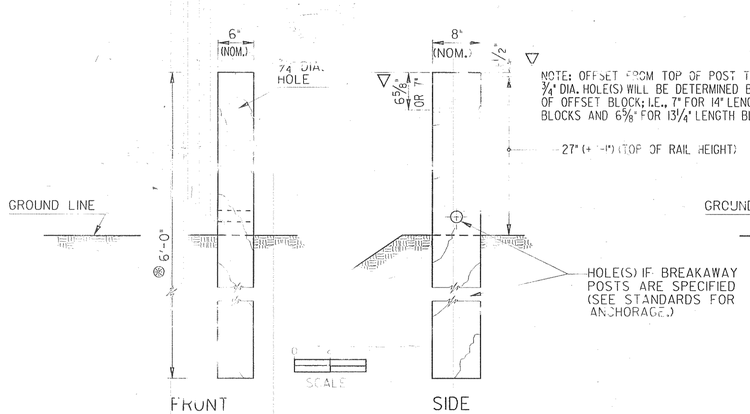

(#) SEE SEPARATE STANDARD OR DETAIL FOR POSTS IN TUBE SLEEVE.

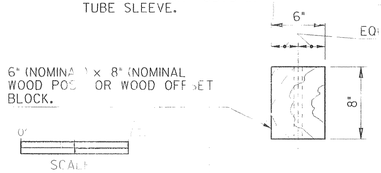

PLAN VIEW (FOR EITHER "W" BEAM OR "T" BEAM POST OR BLOCK)

WOOD POSTS AND WOOD OFFSET BLOCKS MAY BE ROUGH OR SURFACED.

DIMENSIONS FOR WOOD POSTS AND WOOD OFFSET BLOCKS ARE NOMINAL IN ACCORDANCE WITH ACCEPTED LUMBER INDUSTRY STANDARDS.

TYPE D STEEL POST (FOR "W" BEAM GUARDRAIL)

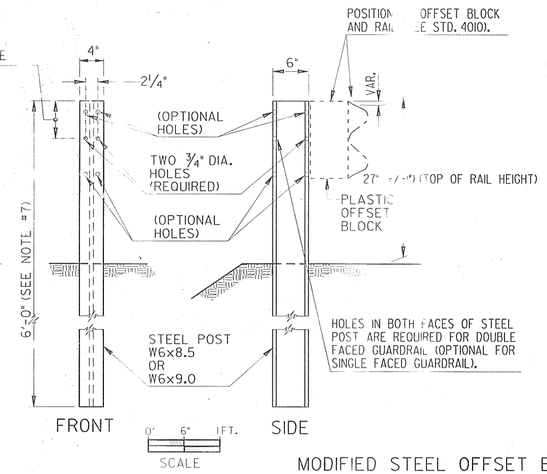

TYPE D-T STEEL POST (FOR "T" BEAM GUARDRAIL)

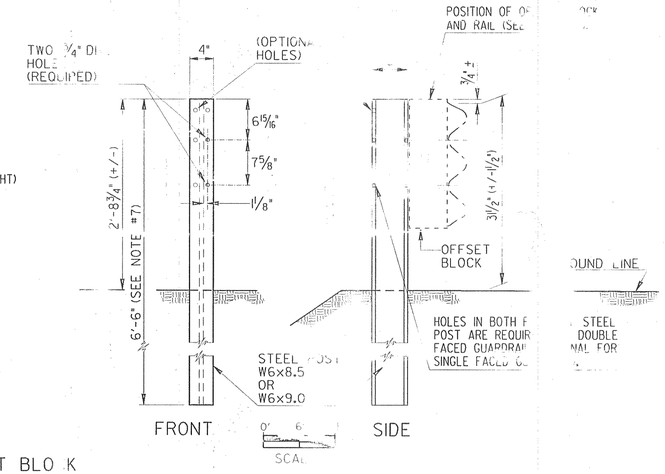

MODIFIED STEEL OFFSET BLOCK FOR "T" BEAM GUARDRAIL

NOTE: MODIFIED STEEL OFFSET BLOCKS ARE USED ONLY WHERE SPECIFIED SEE NOTE 5(c)

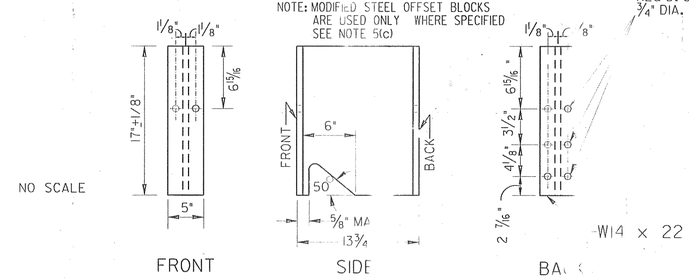

HEIGHT CORRECTION IF NEEDED FOR RESURFACED PROJECTS

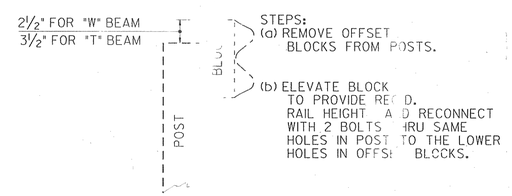

GENERAL NOTES:

1. SPECIFICATIONS GEORGIA STANDARD, CURRENT EDITION AND SUPPLEMENTS THERETO
2. STEEL POSTS MAY BE EITHER ROLLED OR WELDED. STRUCTURAL SHAPES. STEEL OF BETWEEN WEB AND FLANGE
3. WHERE WOOD POST OR WOOD OFFSET BLOCKS PERMITTED, THE WOOD SHALL ACCORDANCE WITH GEORGIA STANDARD SPECIFICATIONS.
4. ALL BOLTS USED FOR FASTENING THE RAIL AND OFFSET BLOCKS TO WOOD POSTS SHALL BE SUFFICIENT LENGTH TO EXTEND AT LEAST 1/4" BEYOND THE NUT, UP TO 3" BEYOND
5. (a) "W" BEAM GUARDRAIL: ALL OFFSET BLOCKS SHALL BE 8" DEPTH PLANKS (NOMINAL) BEVELED
   (b) "T" BEAM GUARDRAIL: STANDARD INSTALLATION UTILIZE 8" DEPTH OFFSET BLOCKS APPROVED.
   (c) 3 3/4" DEPTH MODIFIED OFFSETS MAY BE SPECIFIED WHERE CONDITIONS. PAY ITEM GUARDRAIL, TP SPECIFIED OFFSET BLOCKS
   (d) WOOD OFFSET BLOCKS MAY BE USED ONLY WHEN AN ISOLATED LOCATION WHERE OTHER BLOCK TYPES WOULD BE PROPER OR SHOWN IN THE PLANS.
6. POSTS WILL BE SPACED AT 6'-3" C. TO C. UNLESS OTHERWISE NOTED
7. ADDITIONAL LENGTH POSTS, WHERE SPECIFIED, SHALL BE 7'-0" AND FOR "W" BEAM AND "T" BEAM GUARDRAILS RESPECTIVELY, WITH OTHERWISE DIMENSIONED FROM TOP THE SAME AS SHOWN

BACK-UP PLATE (FOR "T" BEAM GUARDRAIL)

NOTE.
BACK-UP PLATES ARE REQUIRED WITH ALL STEEL OFFSET BLOCKS EXCEPT AT RAIL SPLICES OR WHERE ONE RAIL SECTION IS NESTED INSIDE ANOTHER RAIL SECTION. BACK-UP PLATE WILL BE LOCATED BACK OF RAIL ADJACENT TO OFFSET BLOCKS (INSIDE MAIN RAIL).

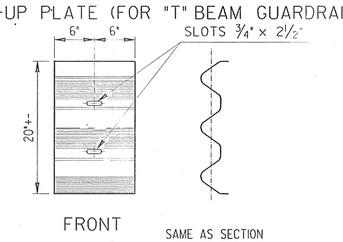

NOTE:
WHERE WOOD OFFSET BLOCK ON STEEL POST IS PERMITTED IN "W" BEAM INSTALLATION, A NAIL OR SCREW FROM POST TO WOOD IS REQUIRED TO PREVENT ROTATION OF THE BLOCK.

WOOD OFFSET BLOCKS

(WHERE PERMITTED, SEE NOTE #7)

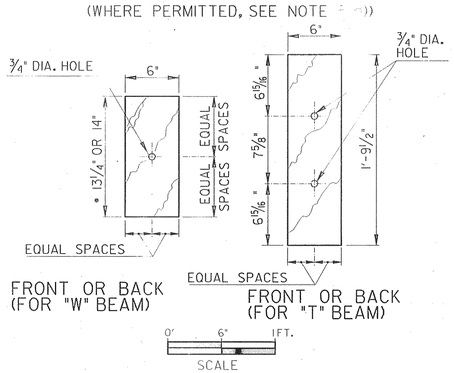

(PLAN VIEW IS SAME AS SHOWN FOR WOOD POST ABOVE)

STANDARD PLASTIC OFFSET BLOCKS

NOTE: PLASTIC OFFSET BLOCKS SHALL BE OF TYPE LISTED IN GA. DOT OPL OF APPROVED PRODUCTS OR PER STANDARD SPECIFICATIONS.

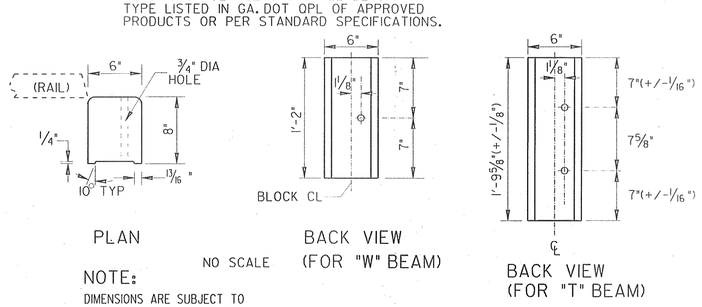

NOTE:
DIMENSIONS ARE SUBJECT TO MANUFACTURER'S TOLERANCES.

CONCRETE FOUNDATION FOR POST IN SHALLOW FILLS OVER CULVERTS OR OTHER OBSTRUCTIONS

(NOTE: PLATE MOUNTED POST MAY BE USED AS AN ALTERNATE, SEE SEPARATE SHEET).

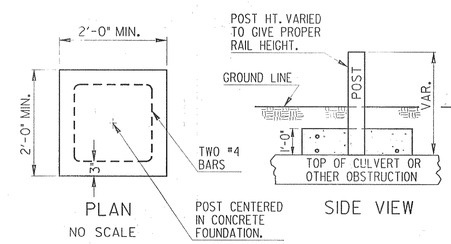

STEEL POST TO BE PLUMBED AND FOUNDATION CONCRETE POURED ABOUT SAME TO FINISHED ELEVATION.

PAYMENT FOR GUARDRAIL TO INCLUDE ALL EXTRA WORK AND MATERIALS INCLUDING CONCRETE (CL. A OR CL. B) AND NO. 4 BARS.

IF OFFSET FROM RAIL FACE TO HEADWALL IS LESS THAN 4'-3", POST SPACINGS ARE REDUCED TO 3'-1 1/2" C.C. ACROSS THE CULVERT WITH 7 SUCH SPACINGS IN ADVANCE AT NO ADDITIONAL PAYMENT.

NOTE: ADDITIONAL DEPTH OFFSETS BE AS SHOWN FOR "W" SIMILAR OFFSETS MAY BE APPROVED FOR "T" BEAM GUARDRAIL

NOTE: ADDITIONAL DEPTH OFFSETS ARE PERMITTED ONLY WHERE AN ISOLATED POST MUST BE PLACED AT A GREATER THAN NORMAL OFFSET.

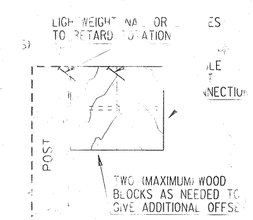

NOTE: BLOCK CONNECTION TO POST AND TO RAIL SEE STD. 4010 (OR 4270).

ADDITIONAL DEPTH OFFSET BLOCKOUTS
USE WHERE GREATER THAN STANDARD OFFSET IS SPECIFIED

REVISION	DATE	DEPARTMENT OF TRANSPORTATION STATE OF GEORGIA
		STANDARD POSTS AND OFFSET BLOCKS FOR "W" & "T" BEAM GUARDRAIL (REPLACES STANDARDS 4011 & 4271)
		SCALE: AS SHOWN REVISED & REDRAWN DEC., 1999
	BY	SUBMITTED STATE TRANSPORTATION & AIRPORT DESIGN ENGINEER CHIEF ENGINEER

NUMBER 4011A