## TYPE A WOOD POST

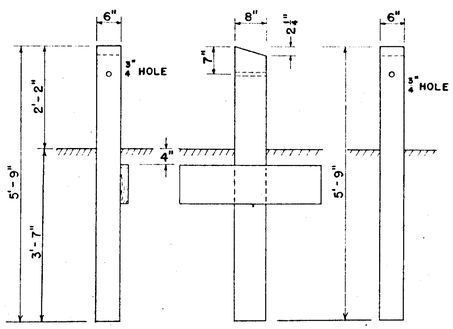


END POST — INTERMEDIATE POST

## TYPE B ROUND WOOD POST

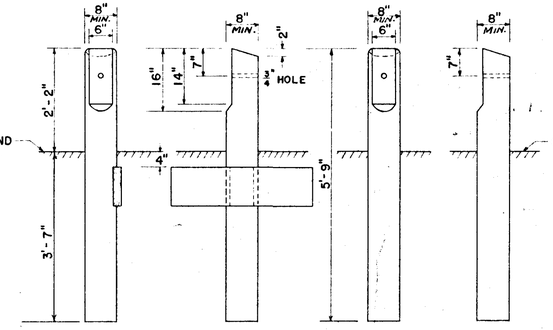


END POST — INTERMEDIATE POST

## TYPE C CONCRETE POST

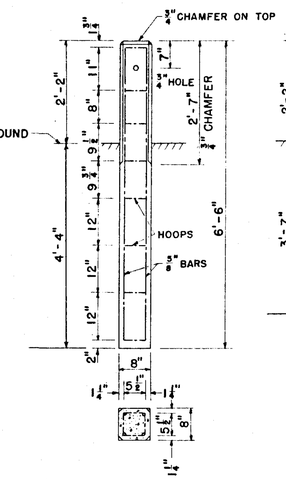


4- 5/8"o BARS 6'-3" LONG
8- 1/4"o HOOPS - LAPPED 8" AND WIRED

## TYPE D STEEL POST (PAINTED)

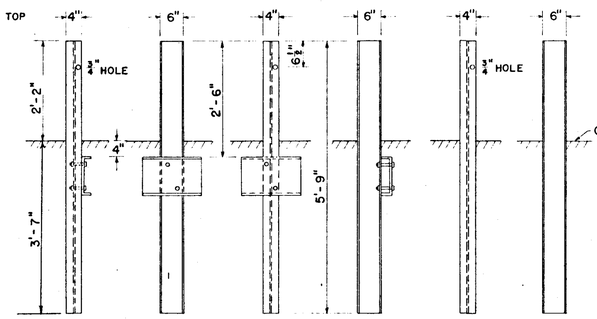


END POST — ADJACENT TO END POST — INTERMEDIATE POST

TYPE "D" POST ARE 6 B 8.5 SECTION

## TYPE E STEEL POST (PAINTED)

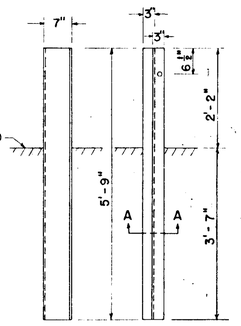


Z 7 x 3 x 8

## TIMBER ANCHOR FOR TYPE A POST

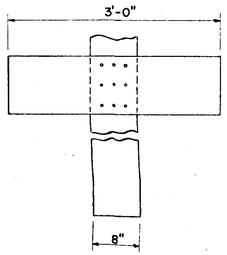


2" x 10" TREATED TIMBER BRACES FASTENED WITH 9 60d NAILS PER POST.
HEW ROUND POST TO PROVIDE 6" BEARING SURFACE.

## TIMBER ANCHOR FOR TYPE B POST

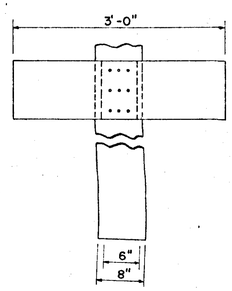


Note: All wood posts to be capped with a galvanized metal cap, gauge No. 28. Metal to be crimped (1½" or 2") and anchored with leaded nails.

## CHANNEL ANCHOR FOR TYPE D POST (PAINTED)

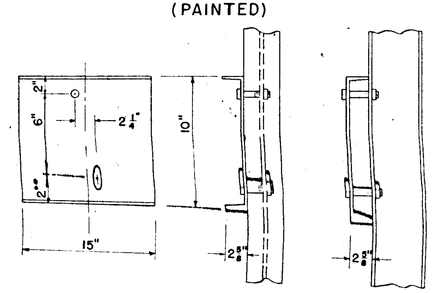


10 LJ 15.3 CHANNEL SECTION
7/8" DIA. HOLES. 3/4" x 4" BLACK MACHINE BOLTS WITH SQUARE HEAD & HEX NUT.

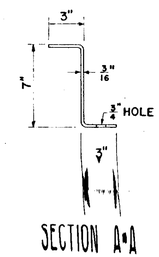


SECTION A-A

## CONCRETE FOUNDATION FOR PLACING TYPE C CONCRETE AND TYPE D OR E STEEL POSTS IN SHALLOW FILLS OVER CONCRETE CULVERTS.

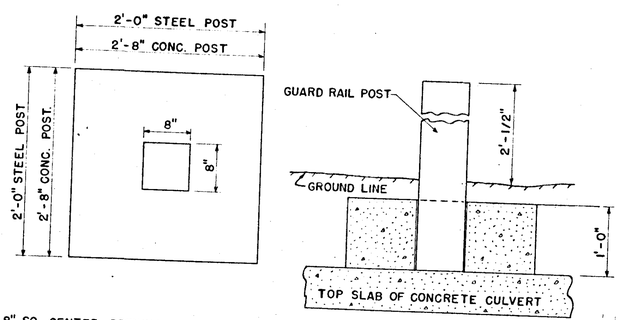


8" SQ. CENTER OPENING OMITTED WHEN STEEL POST IS USED.

STEEL POSTS TO BE PLUMBED AND FOUNDATION CONCRETE POURED ABOUT SAME TO FINISHED ELEVATION. OMIT TAR PAPER.

BOTTOM OF CONC. POST TO BE WRAPPED WITH TWO LAYERS OF 3-PLY TAR PAPER TO BREAK BOND.

PRICE BID PER LIN. FT. FOR GUARD RAIL IS TO INCLUDE ALL COST OF SPECIAL FOUNDATION FOR POSTS TO BE USED OVER CULVERTS HAVING SHALLOW FILL.

FOUNDATION TO BE CLASS "A" CONCRETE

## GENERAL NOTES

### STEEL POSTS

SPECIFICATIONS: GEORGIA STANDARD AND/OR SPECIAL PROVISIONS.

STEEL POSTS ARE TO BE PAINTED IN ACCORDANCE WITH THE STATE STANDARD SPECIFICATIONS.

THE LOWER END OF POSTS PLUS 6" ABOVE THE GROUND LINE ARE TO BE GIVEN A COAT OF WATERPROOFING BITUMEN CONFORMING TO STATE STANDARD SPECIFICATIONS BY PAINTING OR DIPPING.

### WOOD POSTS (UNTREATED)

SPECIFICATIONS: GEORGIA STANDARD AND/OR SPECIAL PROVISIONS.

COASTAL REGION ALTERNATES: CYPRESS AND RED CEDAR.

MOUNTAIN REGION ALTERNATES: BLACK LOCUST AND RED CEDAR.

THE INTERMEDIATE POSTS SHALL BE DISTRIBUTED WITH LIKE SIZES TOGETHER, IN ORDER TO PRODUCE A UNIFORM APPEARANCE.

THE BARK SHALL BE REMOVED IN SUCH A MANNER AS TO PROVIDE A SURFACE IN ACCORDANCE WITH STATE STANDARD SPECIFICATIONS.

### WOOD POSTS (TREATED)

ALTERNATES: SOUTHERN PINE OR SOUTHERN LONGLEAF PINE.

POSTS TO BE TREATED IN ACCORDANCE WITH STATE STANDARD SPECIFICATIONS.

---

ONLY ONE TYPE OF POST SHALL BE USED FOR EACH PROJECT EXCEPT AT SHALLOW FILLS OVER CONCRETE CULVERTS.

ALL BOLTS USED FOR FASTENING THE RAIL OR FITTING TO POSTS SHALL HAVE SUFFICIENT LENGTH TO EXTEND AT LEAST 1/4" BEYOND THE FULL NUT AND THE LENGTH SHALL BE ESTABLISHED TO FIT THE TYPE OF POST USED.

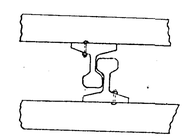

PLAN OF TYPE F POST WHERE DOUBLE FACE GUARD RAIL IS REQUIRED

Note: If Type F steel post is used for double face guard rail, two posts will be required at each post location.

## TYPE F STEEL POST

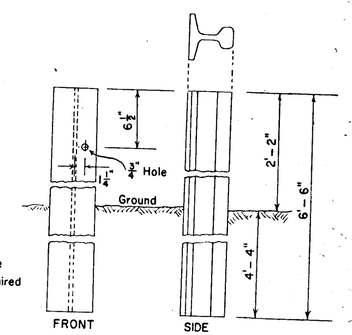


60-LB. MINIMUM RAILROAD RAIL

| REVISIONS | DATE | BY |
|---|---|---|
| Added Type F Steel Post & Min. 15.3 Section Post Lengths | 9-4-56 | J.W.M. |
| | | H.A.S. |

STATE HIGHWAY DEPARTMENT OF GEORGIA
ENGINEERING DEPARTMENT

# STANDARD GUARD RAIL POSTS

NO SCALE

AUGUST 1956

DESIGNED
DRAWN J.W.M.
TRACED J.W.M.
CHECKED

SUBMITTED J. A. Kennedy ROAD DESIGN ENGINEER
APPROVED [illegible] STATE HIGHWAY ENGINEER

NUMBER 4033