FED. ROAD DIV. No.	STATE	~~FED. AID~~ PROJ. No	~~STATE AID~~ PROJ. No.	FISCAL YEAR	SHEET No	TOTAL SHEETS
3	GA.	BA(4) 378-B(2)	PR	58	8	29

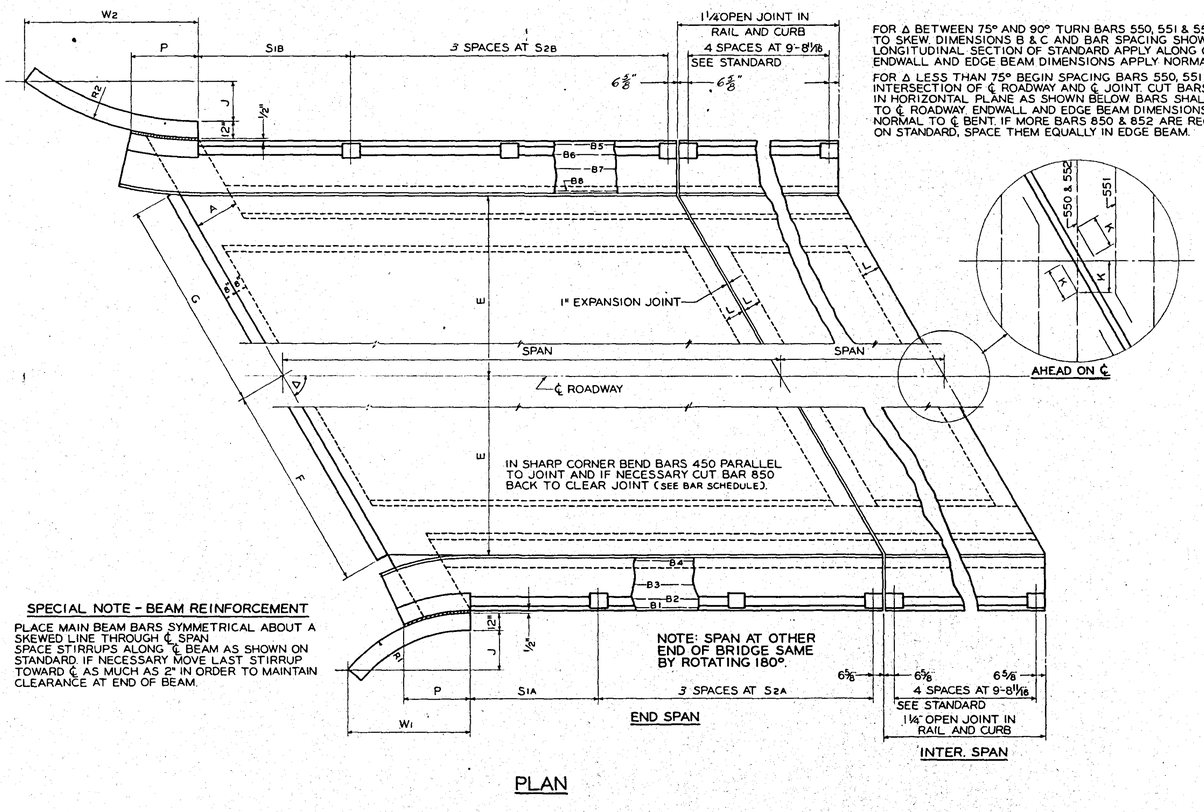

FOR Δ BETWEEN 75° AND 90° TURN BARS 550, 551 & 552 PARALLEL TO SKEW. DIMENSIONS B & C AND BAR SPACING SHOWN ON LONGITUDINAL SECTION OF STANDARD APPLY ALONG ℄ ROADWAY. ENDWALL AND EDGE BEAM DIMENSIONS APPLY NORMAL TO ℄ BENT.

FOR Δ LESS THAN 75° BEGIN SPACING BARS 550, 551 & 552 FROM INTERSECTION OF ℄ ROADWAY AND ℄ JOINT. CUT BARS AND BEND IN HORIZONTAL PLANE AS SHOWN BELOW. BARS SHALL BE NORMAL TO ℄ ROADWAY. ENDWALL AND EDGE BEAM DIMENSIONS APPLY NORMAL TO ℄ BENT. IF MORE BARS 850 & 852 ARE REQUIRED THAN ON STANDARD, SPACE THEM EQUALLY IN EDGE BEAM.

SPECIAL NOTE - BEAM REINFORCEMENT

PLACE MAIN BEAM BARS SYMMETRICAL ABOUT A SKEWED LINE THROUGH ℄ SPAN. SPACE STIRRUPS ALONG ℄ BEAM AS SHOWN ON STANDARD. IF NECESSARY MOVE LAST STIRRUP TOWARD ℄ AS MUCH AS 2" IN ORDER TO MAINTAIN CLEARANCE AT END OF BEAM.

PLAN

DATA-ALL SPANS	
STANDARD NUMBER	A & B
Δ	52°
E	12'-0"
F	15'-2 3/4"
G	15'-2 3/4"
J	2'-3"
K	0'-11 11/16"
L	1'-0"

DATA	40 FT. END SPAN	40 FT. END SPAN
A	2'-0"	2'-0"
P	3'-9"	3'-9"
R_1	6'-0"	6'-0"
R_2	13'-6 1/4"	13'-6 1/4"
W_1	5'-4"	5'-4"
W_2	8'-9 1/2"	8'-9 1/2"
S1A	8'-2 5/8"	8'-2 5/8"
S2A	8'-9"	8'-9"
S1B	9'-5 53/32"	9'-5 53/32"
S2B	9'-11 1/2"	9'-11 1/2"

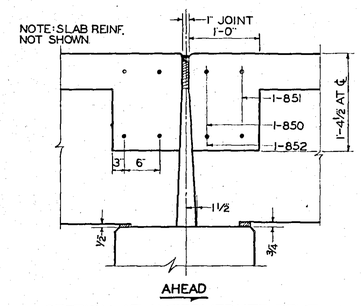

SECTION AT INTERMEDIATE BENT

SCALE: 1"=1'-0"

SCHEDULE OF BARS AFFECTED BY SKEW														
SIZE	BAR	TYPE	LENGTH	A	B	C	D	E	PER 40' END SPAN	PER 40' END SPAN	PER 40' INTER. SPAN	PER INTER. SPAN	PER INTER. SPAN	REMARKS
4	A	1	4'-6"						8	8	0			OMIT
4	M	4	2'-10"						22	22	0			STANDARD BAR
4	B	1	39'-8"						33	33	41			STANDARD BAR
4	B_1	1	35'-8 1/4"						1	1	0			
4	B_2	1	36'-1 1/4"						1	1	0			
4	B_3	1	36'-8"						1	1	0			
4	B_4	1	37'-1 1/2"						1	1	0			
4	B_5	1	35'-9 3/4"						1	1	0			
4	B_6	1	36'-0 3/8"						1	1	0			
4	B_7	1	36'-5 7/8"						1	1	0			
4	B_8	1	36'-6 7/8"						1	1	0			
4	450	5	5'-0"						91	91	102			STANDARD BAR
4	451	1	38'-0"						2	2	0			
5	550	6	27'-2"						35	34	34			STANDARD BAR
5	551	7	27'-11"						34	34	34			STANDARD BAR
5	552	1	24'-11"						35	34	34			STANDARD BAR
5	553	1	30'-2"						1	1	0			
8	850	6	34'-0 3/4"	1'-2"	31'-8 3/4"	1'-2"			1	1	2			
8	851	7	36'-1 1/2"	31'-8 3/4"	4'-10 9/16"	0'-9 7/8"	3'-4 7/8"	3'-4 7/8"	1	1	2			
8	852	1	26'-9 1/2"						1	1	2			

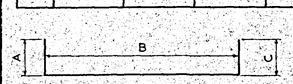

TYPE 6

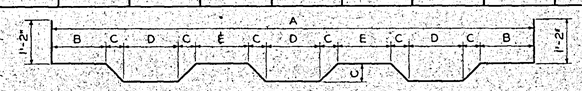

TYPE 7

NUMBER OF 550, 551 & 552 BARS SHOWN IS EQUIVALENT NUMBER OF FULL LENGTH BARS. BEND ENDS OF BARS B1 TO B8 TO FIT CURB RADII. (IN FIELD)

QUANTITIES	PER 40' END SPAN	PER 40' END SPAN	PER 40' INTER. SPAN	PER INTER. SPAN	PER INTER. SPAN
CU. YDS. CLASS "A" CONCRETE	46.11	46.11	42.50		
LBS. BAR REINFORCEMENT STEEL	11,468	11,468	11,507		
LIN. FT. CONCRETE HANDRAILING	84	84	80		

NOTE: QUANTITIES SHOWN ABOVE ARE FOR ESTIMATING PURPOSES ONLY. REINFORCEMENT STEEL QUANTITIES SHOWN INCLUDES HANDRAIL REINFORCEMENT.

USE THIS SHEET WITH GA. STDS. 3558 A & B AND 3616

DATE	BY	REVISIONS

STATE HIGHWAY DEPARTMENT OF GEORGIA
BRIDGE DEPARTMENT

DECK MODIFICATION DETAILS
BRIDGE OVER DUCK CREEK
STA. 18+75 TO STA. 19+95
WALKER COUNTY B.A.(4) P.R. 378-B(2)

SCALE AS SHOWN OCTOBER 1958

DESIGNED A.R.B. DRAWN A.R.B. TRACED P.A.B. CHECKED L.R.P. REVIEWED R.K.J. APPROVED