FED. ROAD DIV. No.	STATE	FED. AID PROJ. No.	STATE AID PROJ. No.	FISCAL YEAR	SHEET No.	TOTAL SHEETS
3	Ga.	I-85-1 (38)41		68	127A/B	313

Added To Plans 4/1/69

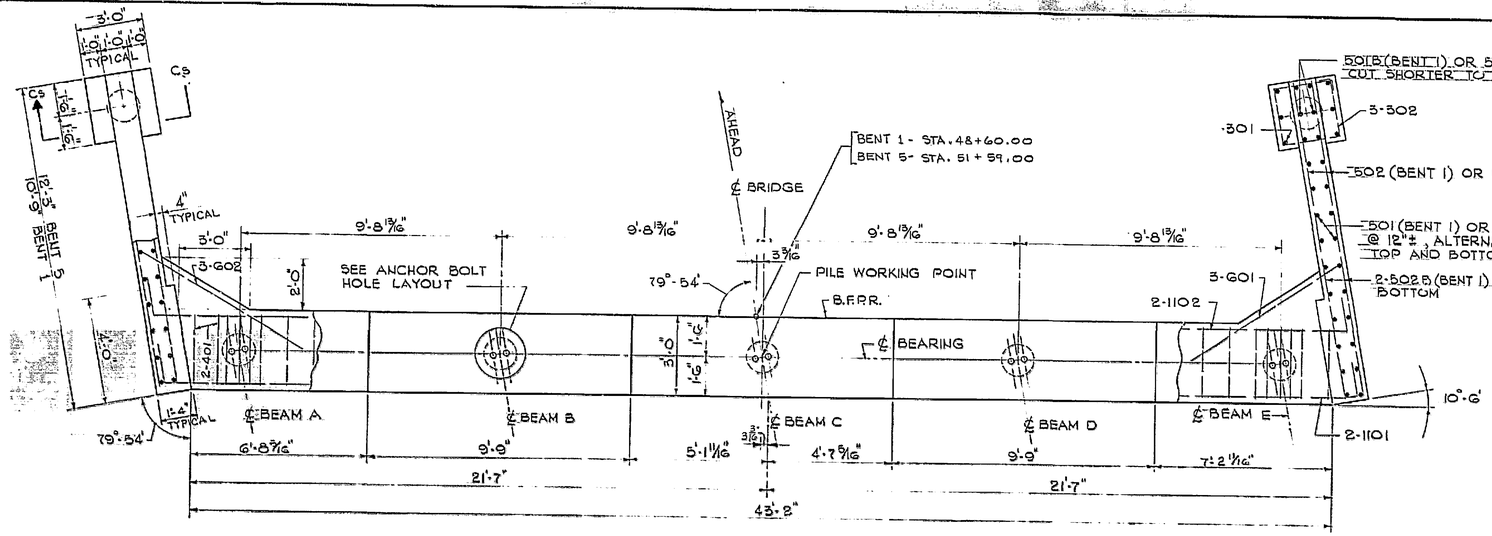

PLAN - END BENT 5
(END BENT 1 SIMILAR)
3/8" = 1'-0"

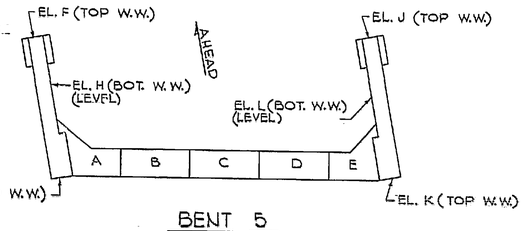

BENT 5

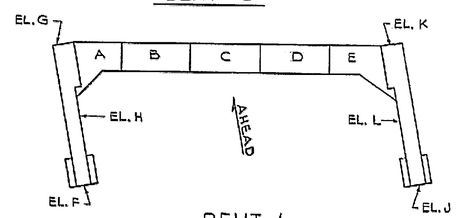

BENT 1

ELEVATION DIAGRAM
NO SCALE

ELEVATIONS											
BT. \ EL.	A	B	C	D	E	F	G	H	J	K	L
1	896.46	896.56	896.68	896.44	896.21	900.08	900.47	894.46	899.80	900.19	894.16
5	906.15	906.30	906.44	906.22	905.98	910.40	910.09	904.15	910.21	909.90	903.95

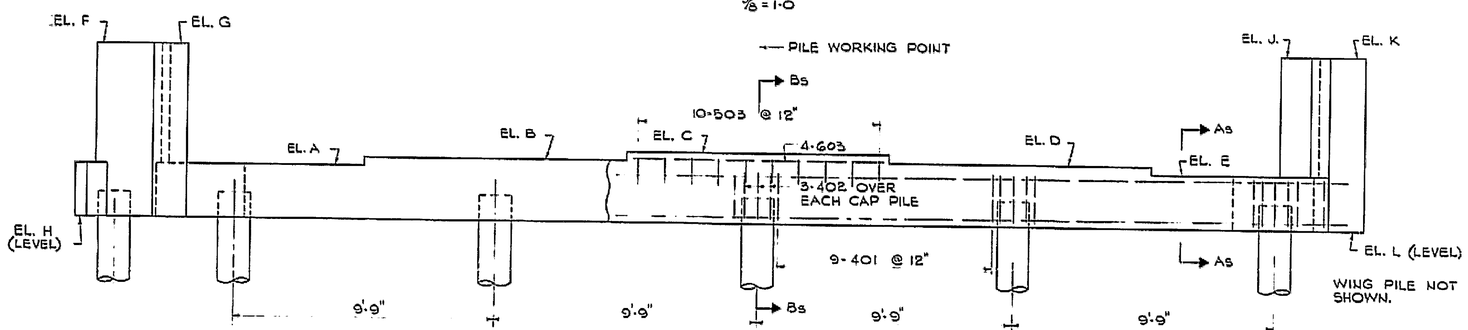

POUR WINGS AND CAP MONOLITHICALLY.

BENT 1 - ALL PILES SHALL BE 12¾" O.D. C.I.P. CONCRETE.
BENT 5 - ALL PILES SHALL BE 14" O.D. C.I.P. CONCRETE.

ELEVATION - END BENT 5
(END BENT 1 SIMILAR)
3/8" = 1'-0"

QUANTITIES		
ITEM \ BENT	1	5
CU. YDS. CLASS "A" CONCRETE	16.77	17.66
LBS. BAR REINFORCEMENT STEEL	2052	2151

PLAN DRIVING OBJECTIVE

BENT 1 - DRIVE PILES TO 40 TONS DYNAMIC BEARING.
BENT 5 - DRIVE PILES TO 54 TONS DYNAMIC BEARING

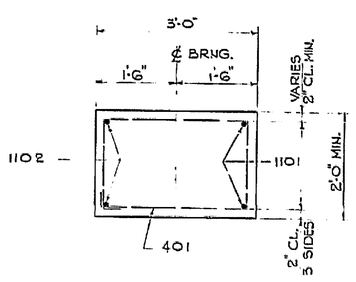

SECTION As - As
3/4" = 1'-0"

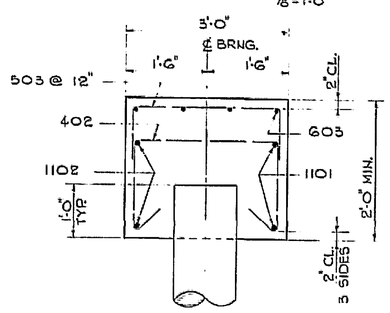

SECTION Bs - Bs
3/4" = 1'-0"

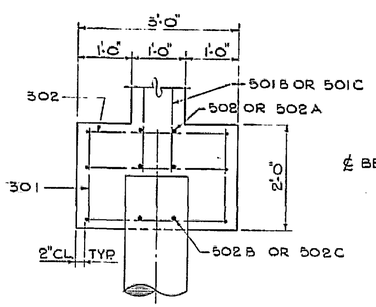

SECTION Cs - Cs
3/4" = 1'-0"

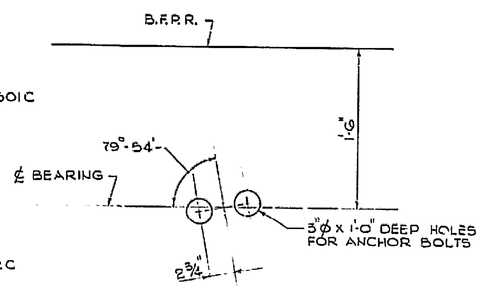

ANCHOR BOLT HOLE LAYOUT
1½" = 1'-0"

BRIDGE NO. 7

EECO 67/405

BRIDGE SHEET 75 OF 91

REVISIONS | DATE | BY

STATE HIGHWAY DEPARTMENT OF GEORGIA
BRIDGE DEPARTMENT

EASTERN ENGINEERING COMPANY
ATLANTA GEORGIA

END BENT DETAILS
S-736 UNDERPASS
STA. 48+60.00 TO STA. 51+59.00
COWETA COUNTY I.85-1(38)41
SCALE: AS SHOWN MARCH 1968

DESIGNED J.A.M. | TRACED | REVIEWED
DRAWN E.A.D. | CHECKED J.A.M. | APPROVED

22" 17" 11" 8.5" 8.5" 11" 17" 22" 34"