STATE	PROJECT NUMBER	SHEET NO.	TOTAL SHEETS
GA.		125	209

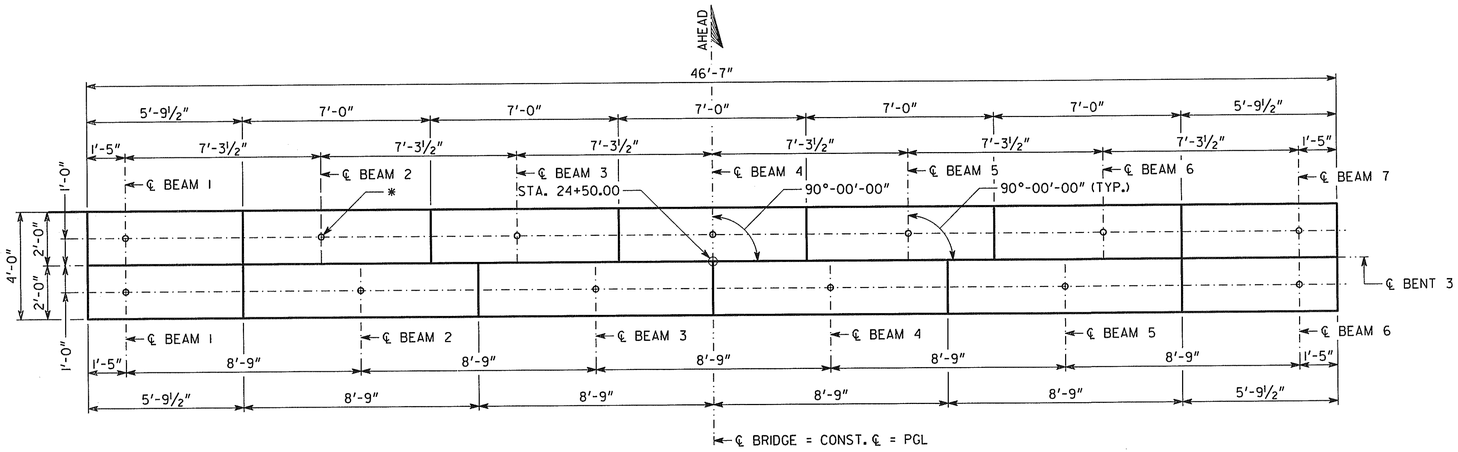

PLAN

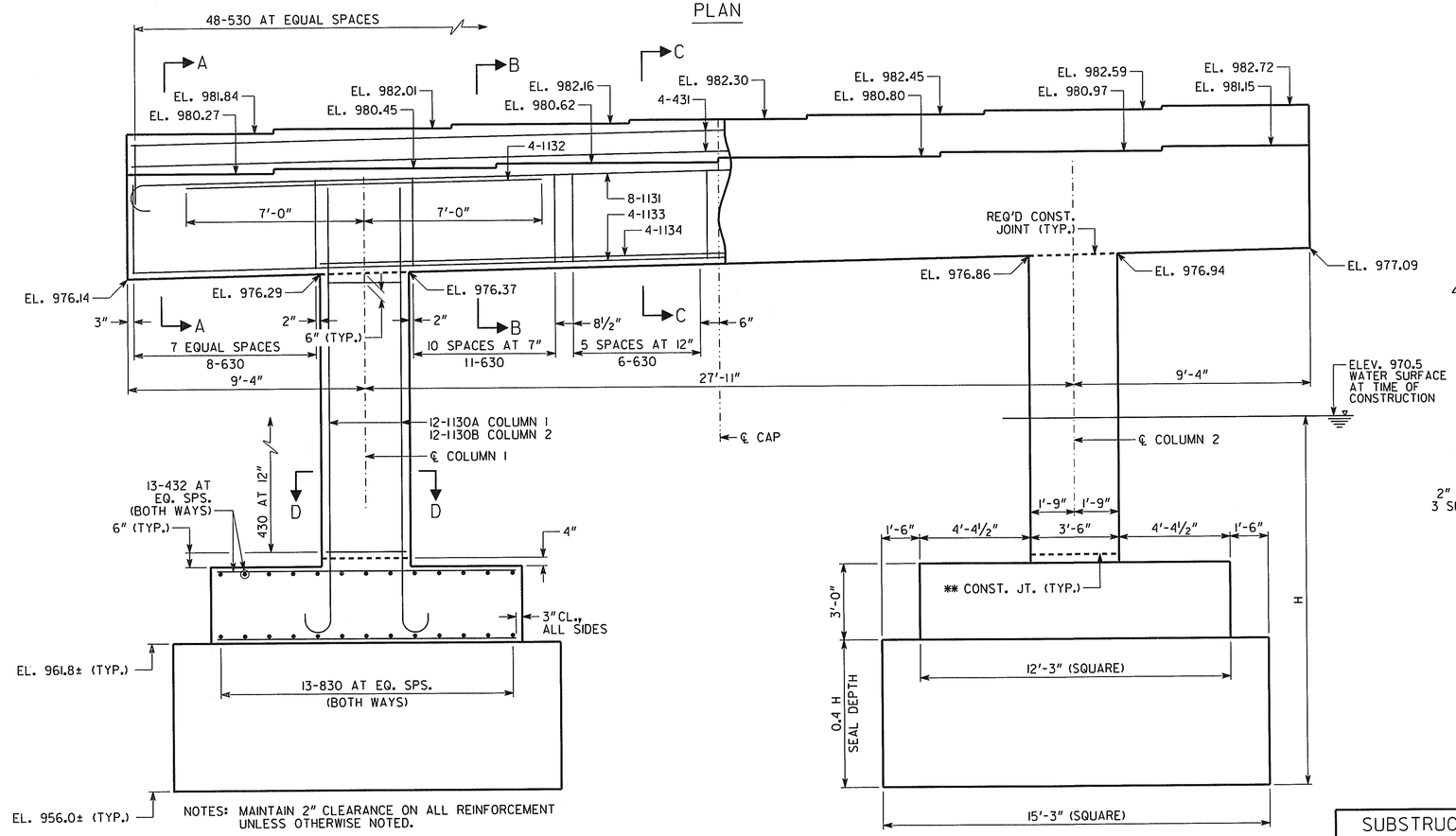

NOTES: MAINTAIN 2" CLEARANCE ON ALL REINFORCEMENT UNLESS OTHERWISE NOTED.

10-431 BARS IN VERTICAL FACE NOT SHOWN IN ELEVATION VIEW.

CAP REINFORCING SYMMETRICAL ABOUT ℄ CAP.

* FORM 3" DIAMETER X 12" DEEP HOLE FOR SMOOTH DOWEL BAR.

** AT CONTRACTOR'S OPTION, CONSTRUCTION JOINT MAY BE RELOCATED TO TOP OF FOOTING.

ELEVATION
BENT 3 - "LOOKING AHEAD"

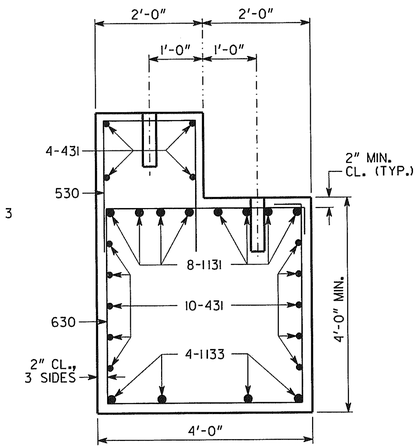

SECTION A-A
SCALE: ¾" = 1'-0"

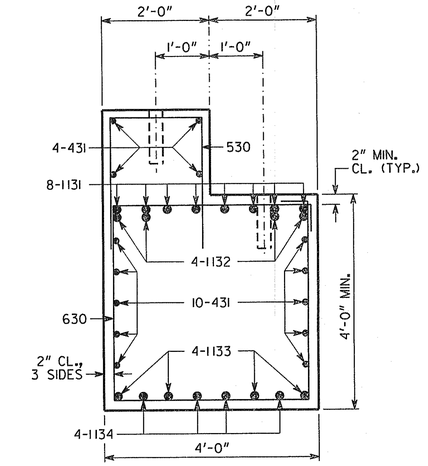

SECTION B-B
SCALE: ¾" = 1'-0"

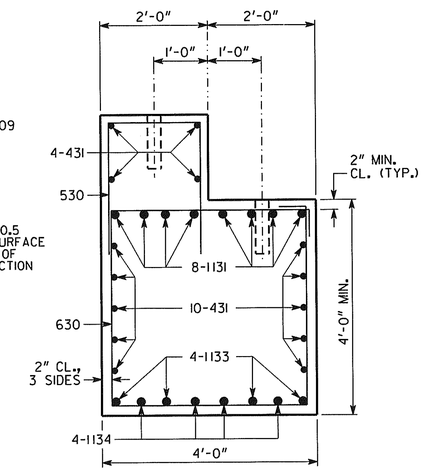

SECTION C-C
SCALE: ¾" = 1'-0"

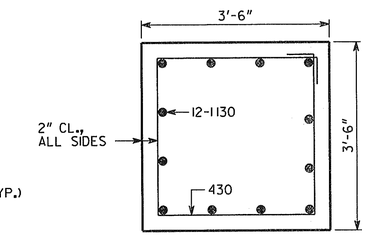

SECTION D-D
SCALE: ¾" = 1'-0"

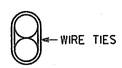

BARS TO BE BUNDLED SHALL BE BUNDLED VERTICALLY

BUNDLING DETAIL
NO SCALE

SPREAD FOOTINGS ARE DESIGNED FOR AN ALLOWABLE BEARING PRESSURE OF 10 KIPS PER SQUARE FOOT EMBEDDED 3 FEET INTO WEATHERED ROCK OR 1 FOOT INTO HARD ROCK.

BRIDGE NO. 1 - ALTERNATE 1

SUBSTRUCTURE QUANTITIES

ITEM	BENT 3
CU YD CLASS "AA" CONCRETE	77.8
LB BAR REINFORCEMENT STEEL	11005

BRIDGE SHEET 17 OF 21

BY	REVISIONS	DATE

GEORGIA
DEPARTMENT OF TRANSPORTATION
PRECONSTRUCTION DIVISION-OFFICE OF BRIDGE DESIGN

SUBSTRUCTURE DETAILS - BENT 3
CR 85 (KIMBALL BRIDGE ROAD)
OVER BIG CREEK

FULTON COUNTY BRZLB-0121-00(017)

SCALE: ⅜" = 1'-0" (UNLESS NOTED) FEBRUARY 2008

DESIGNED LEL	CHECKED DLC	REVIEWED WMD
DRAWN WMC	DESIGN GROUP SWW	APPROVED PVL

F771270B1.DGN