STATE	PROJECT NUMBER	SHEET NO.	TOTAL SHEETS
GA.		124	209

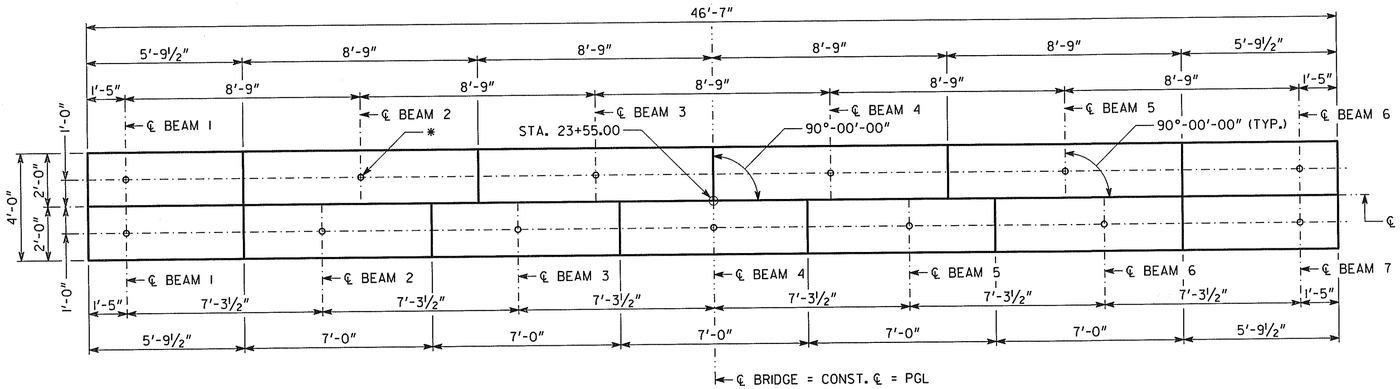

PLAN

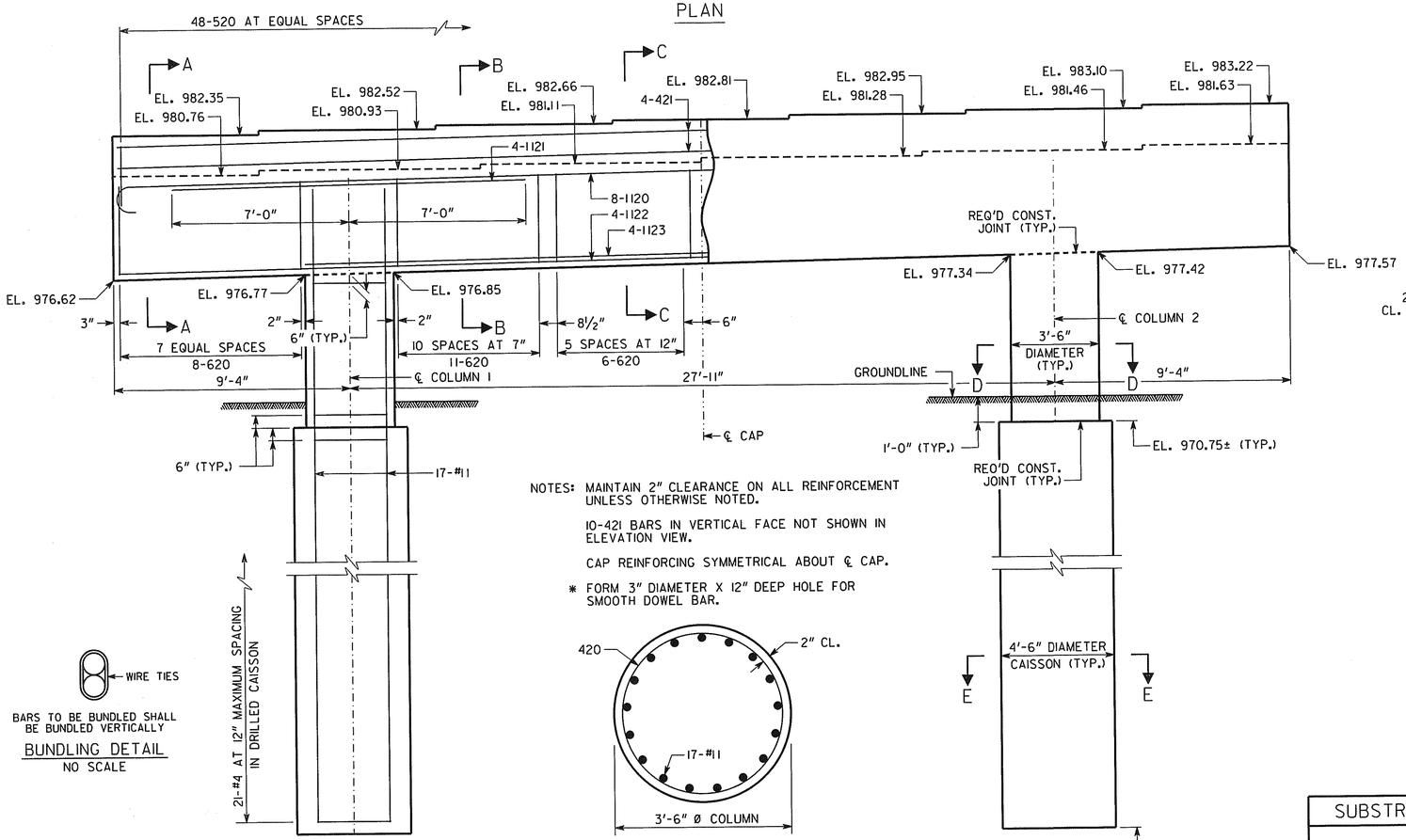

NOTES: MAINTAIN 2" CLEARANCE ON ALL REINFORCEMENT UNLESS OTHERWISE NOTED.

10-421 BARS IN VERTICAL FACE NOT SHOWN IN ELEVATION VIEW.

CAP REINFORCING SYMMETRICAL ABOUT ℄ CAP.

* FORM 3" DIAMETER X 12" DEEP HOLE FOR SMOOTH DOWEL BAR.

BARS TO BE BUNDLED SHALL BE BUNDLED VERTICALLY

BUNDLING DETAIL

NO SCALE

SECTION D-D

SCALE: ¾" = 1'-0"

ELEVATION

BENT 2 - "LOOKING AHEAD"

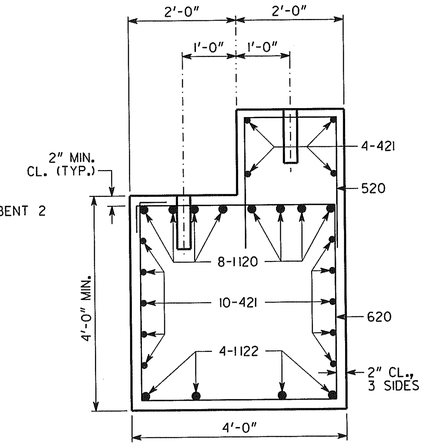

SECTION A-A

SCALE: ¾" = 1'-0"

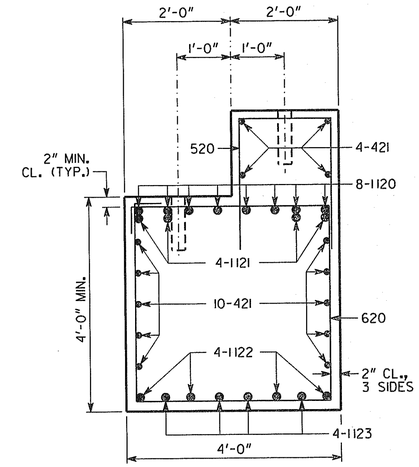

SECTION B-B

SCALE: ¾" = 1'-0"

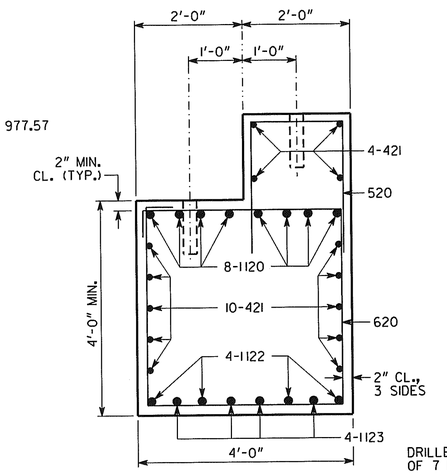

SECTION C-C

SCALE: ¾" = 1'-0"

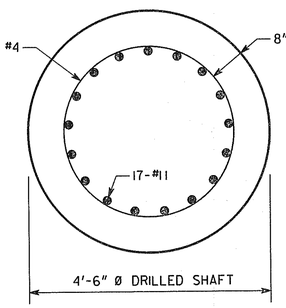

SECTION E-E

SCALE: ¾" = 1'-0"

DRILLED CAISSON NOTES

DRILLED CAISSONS SHALL HAVE A MINIMUM PENETRATION OF 7 FEET INTO SOUND ROCK.

DRILLED CAISSONS ARE DESIGNED FOR AN ALLOWABLE END BEARING PRESSURE OF 80 KIPS PER SQUARE FOOT ON SOUND ROCK.

TOP OF DRILLED CAISSONS SHALL BE 1'-0" BELOW ORIGINAL GROUNDLINE.

SUBSTRUCTURE QUANTITIES

ITEM	BENT 2
CU YD CLASS "AA" CONCRETE	38.4
LB BAR REINFORCEMENT STEEL	6396

BRIDGE NO. 1 - ALTERNATE 2

GEORGIA
DEPARTMENT OF TRANSPORTATION
PRECONSTRUCTION DIVISION-OFFICE OF BRIDGE DESIGN

SUBSTRUCTURE DETAILS - BENT 2
CR 85 (KIMBALL BRIDGE ROAD)
OVER BIG CREEK

FULTON COUNTY BRZLB-0121-00(017)

SCALE: ⅜" = 1'-0" (UNLESS NOTED) FEBRUARY 2008

DESIGNED LEL | CHECKED DLC | REVIEWED WMD
DRAWN WMC | DESIGN GROUP SWW | APPROVED PVL

REVISIONS | DATE | BY

BRIDGE SHEET 16 OF 21

F77127OBI.DGN