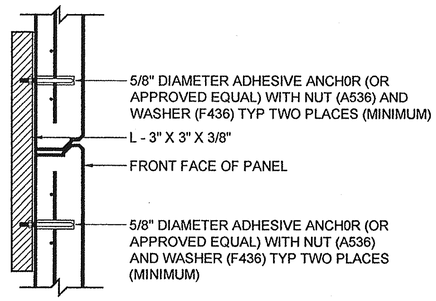

A 19 ANGLE PANEL TO PANEL CONNECTOR
PLAN VIEW

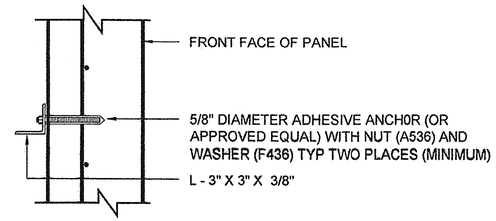

B 19 ANGLE PANEL TO PANEL CONNECTOR SECTION
SECTION VIEW

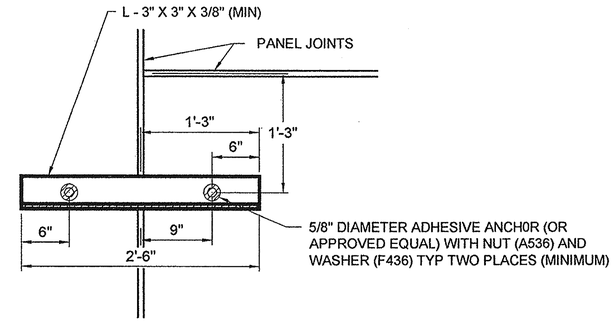

C 19 ANGLE PANEL TO PANEL CONNECTOR ELEVATION
BACK FACE ELEVATION

NOTES:
1. PANEL ANCHOR TO BE 5/8" DIAMETER STAINLESS STEEL HILTI HAS ROD (Fy=65 KSI) WITH 4" EMBED USING HILTI HIT-HY 150 MAX ADHESIVE ANCHORING SYSTEM OR EQUIVALENT.
2. NUTS AND WASHERS TO MEET REQUIREMENTS OF HILTI HAS ROD.
3. MANUFACTURER'S PREPARATION AND INSTALLATION PROCEDURES SHALL BE FOLLOWED.
4. HILTI ANCHOR TO BE INSTALLED NO CLOSER THAN 6" WITHIN PANEL EDGE.
5. ALL MATERIAL TO BE GALVANIZED.

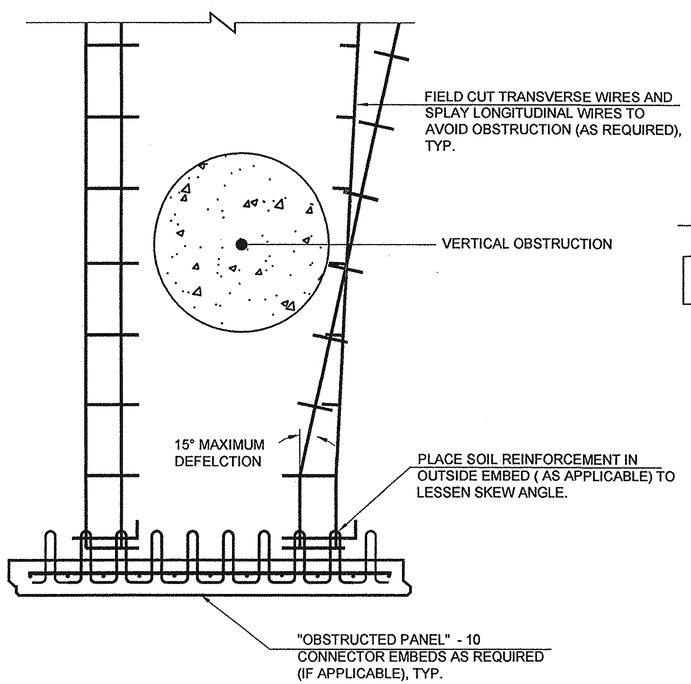

D 19 VERTICAL OBSTRUCTION
PLAN VIEW

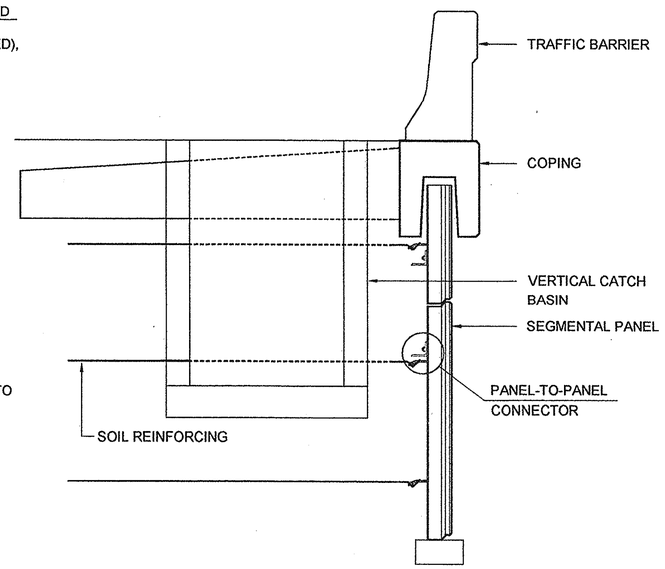

E 19 TYPICAL BARRIER WALL INLET SECTION
SECTION VIEW

DATE: FEB 11 2013
Approved in general. Details not checked. This approval shall not relieve the Contractor of any responsibility for conformity with the contract Plans and Specifications.
Georgia DOT
Office of Bridge Design
By: TSW

DATE: 11/27/12
Approved in general, details not checked. This approval shall not relieve the Contractor of any responsibility for conformity with the contract Plans and Specifications.
Heath & Lineback Engineers, Inc.
By: VAK

GEORGIA REGISTERED No. PE036989 PROFESSIONAL ENGINEER CHRISTOPHER M. STAUD 11/26/12

REV NO.	DATE	BY	DESCRIPTION			
				DESIGNED	ES	11/2012
				DES. CHK	CMS	11/2012
				DRAWN BY	MWC	11/2012
				DWG. CHK	ES	11/2012

T&B STRUCTURAL SYSTEMS
6800 MANHATTAN BLVD. - STE 304
FT. WORTH, TEXAS 76120, 888-280-9850
CA 12037583 • www.tbssus.com

S.R. 400/I-85-DESIGN BUILD
FULTON COUNTY, GA.
PROJECT: NH-85-2(153)
P.I. No.: 762380

INSTALLATION GUIDELINES
SHEET 3 OF 3

CONTRACTOR
ARCHER WESTERN

CONTRACTOR PN

TBSS PROJECT NUMBER 12010.5

DWG NO. 19

THIS DRAWING IS THE PROPERTY OF T&B STRUCTURAL SYSTEMS, LLC AND CONTAINS PROPRIETARY INFORMATION FOR USE WITH THIS PROJECT ONLY. THE DESIGN CONTAINED HEREIN IS BASED ON INFORMATION SUPPLIED BY OTHERS. TBSS IS CERTIFYING INTERNAL STABILITY OF THE STRUCTURE ONLY. EXTERNAL STABILITY REQUIREMENTS ARE THE RESPONSIBILITY OF OTHERS..
© T&B STRUCTURAL SYSTEMS, LLC (2012)

P:\AA_Project File\12 Projects\12010-SR 400-I 85, Fulton County, GA\ACAD\12010 MSE BASE_REV 3.dwg
mcate
11/26/2012 9:26:17 AM