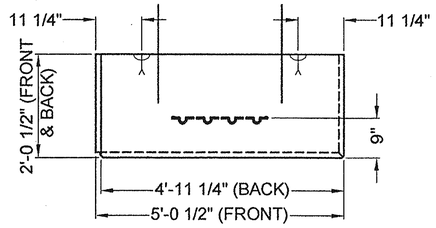

TA 12 TYPE 'TA' - 2'-0" PANEL (BACK FACE ELEVATION)

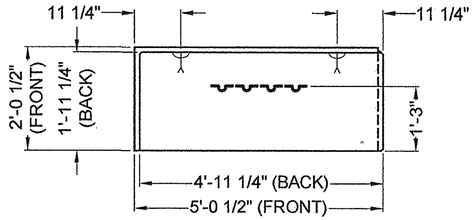

PA 12 TYPE 'PA' - 2'-0" PANEL (BACK FACE ELEVATION)

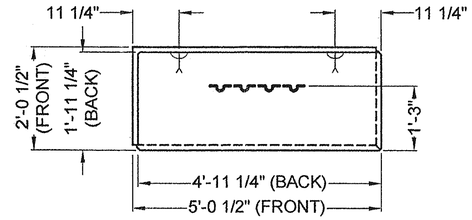

A 12 TYPE 'A' - 2'-0" PANEL (BACK FACE ELEVATION)

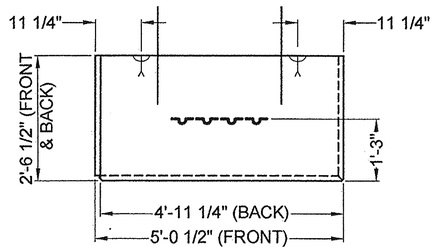

TB 12 TYPE 'TB' - 2'-6" PANEL (BACK FACE ELEVATION)

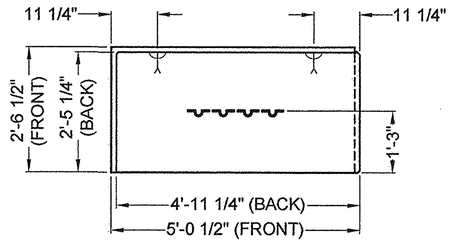

PB 12 TYPE 'PB' - 2'-6" PANEL (BACK FACE ELEVATION)

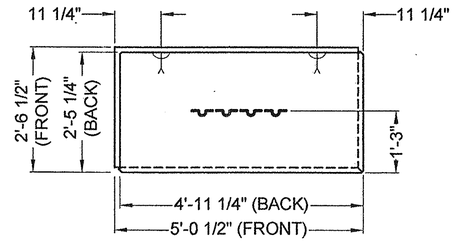

B 12 TYPE 'B' - 2'-6" PANEL (BACK FACE ELEVATION)

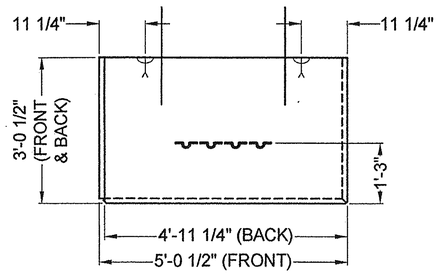

TC 12 TYPE 'TC' - 3'-0" PANEL (BACK FACE ELEVATION)

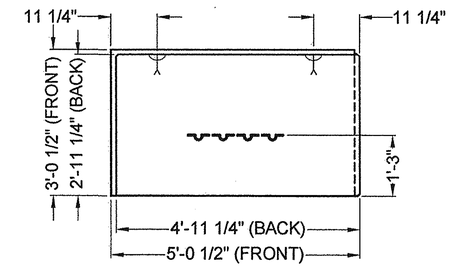

PC 12 TYPE 'PC' - 3'-0" PANEL (BACK FACE ELEVATION)

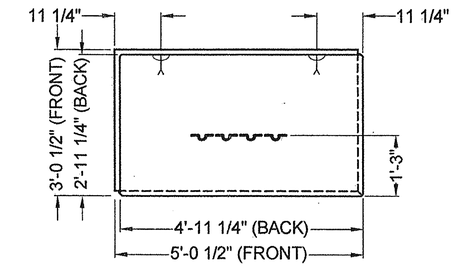

C 12 TYPE 'C' - 3'-0" PANEL (BACK FACE ELEVATION)

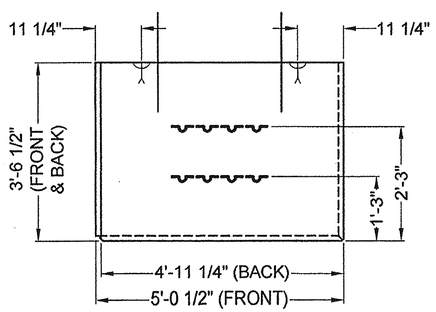

TD 12 TYPE 'TD' - 3'-6" PANEL (BACK FACE ELEVATION)

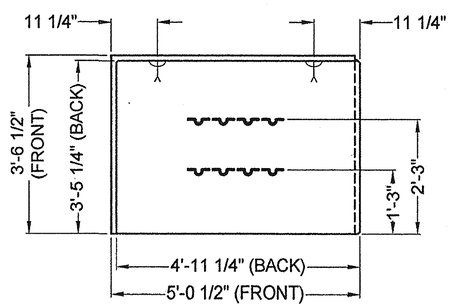

PD 12 TYPE 'PD' - 3'-6" PANEL (BACK FACE ELEVATION)

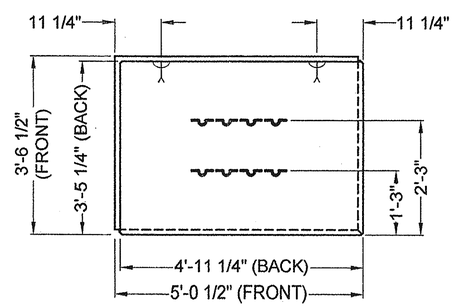

D 12 TYPE 'D' - 3'-6" PANEL (BACK FACE ELEVATION)

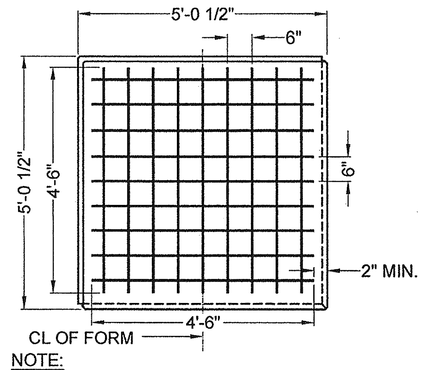

NOTE:
1. MINIMUM 2" COVER AT ALL EDGES
2. CENTER MESH IN FORM
3. TRIM AS REQUIRED
4. MINIMUM 6" X 6" - W7.0 X W7.0 WWR

P 12 STANDARD PANEL REINFORCEMENT

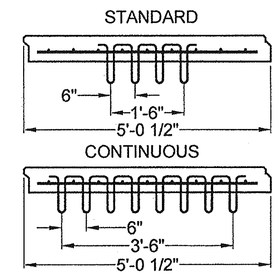

R 12 ANCHOR PLACEMENT PLAN VIEW

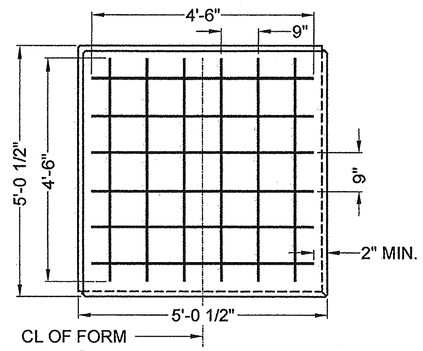

NOTE:
1. MINIMUM 2" COVER AT ALL EDGES
2. CENTER REBAR IN FORM
3. TRIM AS REQUIRED
4. MINIMUM #4 BAR BOTH WAYS
5. TIE REBAR TOGETHER AT INTERSECTION POINTS

Q 12 OPTIONAL PANEL REINFORCEMENT

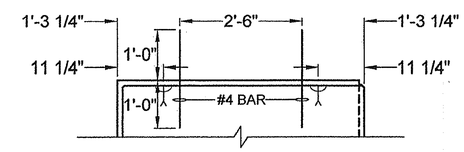

DOWELS SHALL BE TRIMMED IN FIELD TO REQUIRED LENGTH

S 12 TOP PANEL DOWEL DETAIL

DATE: ~~FEB 1 1 2013~~
Approved in general. Details not checked. This approval shall not relieve the Contractor of any responsibility for conformity with the contract Plans and Specifications.
Georgia DOT
Office of Bridge Design
By: TJM

DATE: 11/27/12
Approved in general, details not checked. This approval shall not relieve the Contractor of any responsibility for conformity with the contract Plans and Specifications.
Heath & Lineback Engineers, Inc.
By: KAK

GEORGIA REGISTERED No. PE036989 PROFESSIONAL ENGINEER CHRISTOPHER M. STAUD 11/26/12

REV NO.	DATE	BY	DESCRIPTION			
				DESIGNED	ES	11/2012
				DES. CHK	CMS	11/2012
				DRAWN BY	MWC	11/2012
				DWG. CHK	ES	11/2012

T&B STRUCTURAL SYSTEMS
6800 MANHATTAN BLVD. - STE 304
FT. WORTH, TEXAS 76120, 888-280-9850
CA 12037583 • www.tbssus.com

S.R. 400/I-85-DESIGN BUILD
FULTON COUNTY, GA.
PROJECT: NH-85-2(153)
P.I. No.: 762380

STANDARD COMPONENT DETAILS
SHEET 2 OF 5

CONTRACTOR
ARCHER WESTERN

CONTRACTOR PN

TBSS PROJECT NUMBER 12010.5

DWG NO. 12

THIS DRAWING IS THE PROPERTY OF T&B STRUCTURAL SYSTEMS, LLC AND CONTAINS PROPRIETARY INFORMATION FOR USE WITH THIS PROJECT ONLY. THE DESIGN CONTAINED HEREIN IS BASED ON INFORMATION SUPPLIED BY OTHERS. TBSS IS CERTIFYING INTERNAL STABILITY OF THE STRUCTURE ONLY. EXTERNAL STABILITY REQUIREMENTS ARE THE RESPONSIBILITY OF OTHERS..
© T&B STRUCTURAL SYSTEMS, LLC (2012)

P:\AA_Project Files\12 Projects\12010-SR 400-I 85, Fulton County, GA\ACAD\12010 MSE BASE_REV3.dwg
mcate
11/26/2012 9:25:42 AM