STATE	PROJECT NUMBER	SHEET NO.	TOTAL SHEETS
GA.	NH000-0085-02(153)	395	623

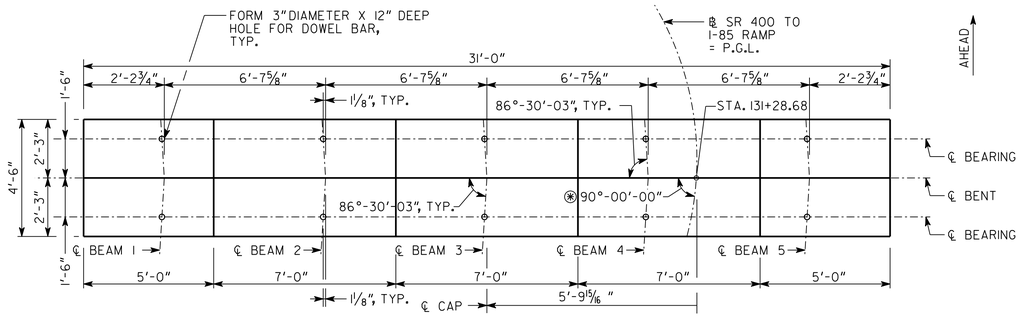

PLAN

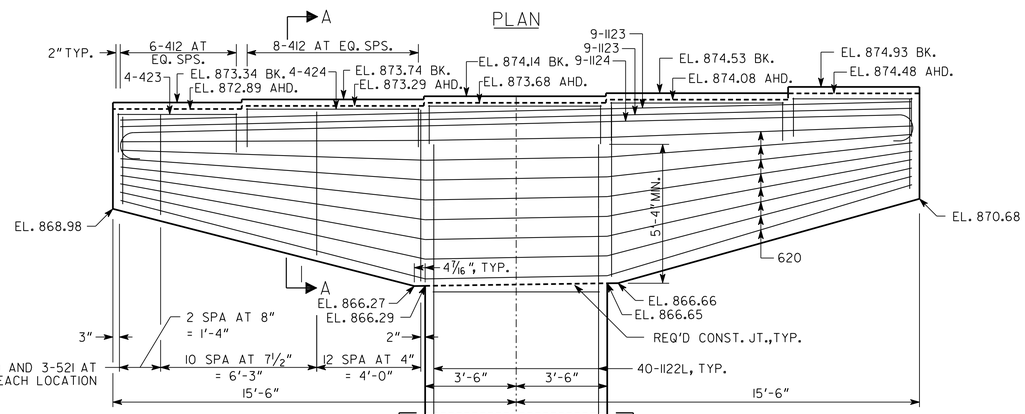

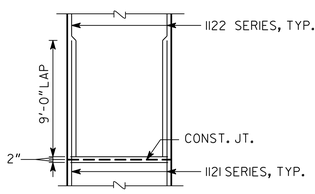

COLUMN CONSTRUCTION JOINT DETAIL

NO SCALE

PROVIDE CONSTRUCTION JOINTS AT THE FOLLOWING LOCATIONS:

ELEV.

834.00

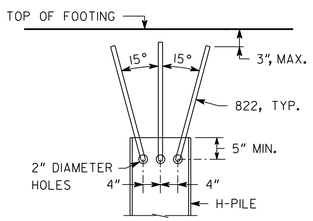

PILE CONNECTION DETAIL

NO SCALE

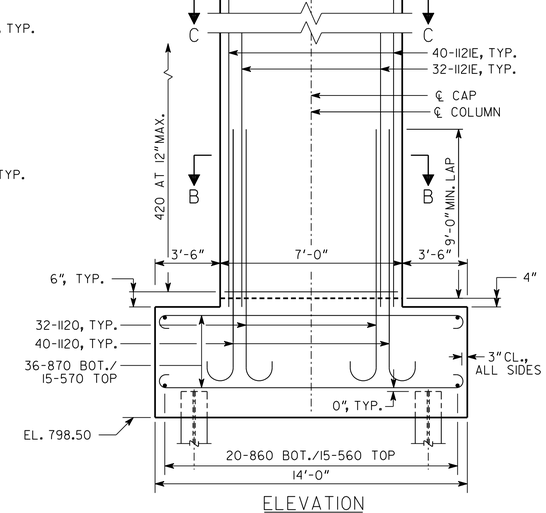

ELEVATION

(LOOKING AHEAD)

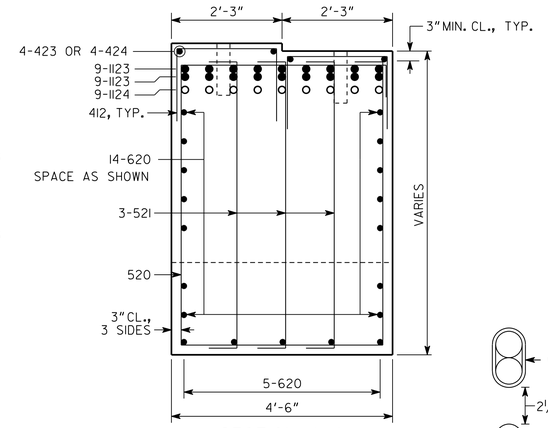

SECTION A-A

NO SCALE

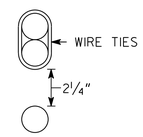

BARS TO BE BUNDLED SHALL BE BUNDLED VERTICALLY

BUNDLING DETAIL

NO SCALE

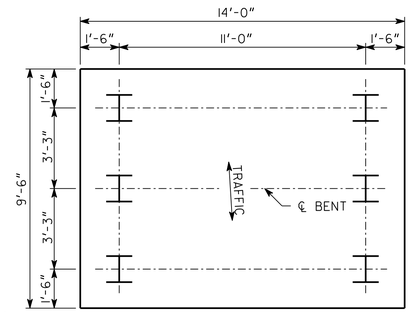

PILE LAYOUT

NO SCALE

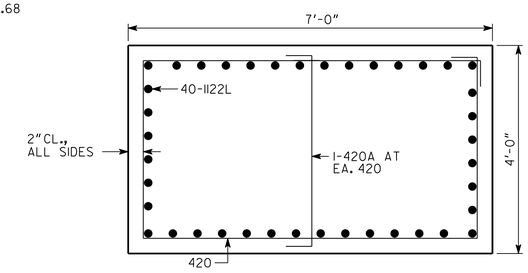

SECTION C-C

NO SCALE

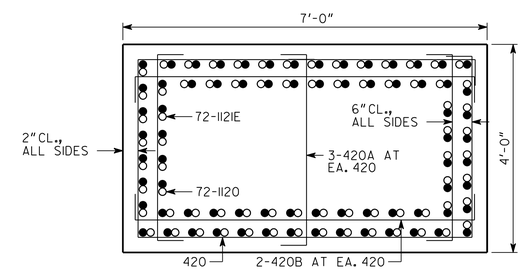

SECTION B-B

NO SCALE

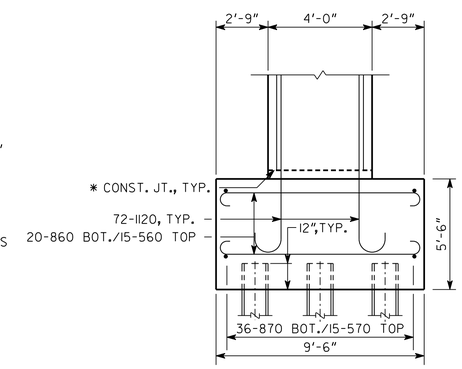

SIDE ELEVATION

NOTES:
1. MAINTAIN 2"CL. ON ALL REINFORCEMENT UNLESS OTHERWISE NOTED.
2. ⊛ ANGLE IS MEASURED FROM TANGENT ON ℄ SR 400 TO I-85 RAMP AT ℄ BENT.
3. ✱ AT CONTRACTOR'S OPTION CONSTRUCTION JOINT MAY BE RELOCATED TO TOP OF FOOTING.

ALL PILES SHALL BE STEEL H, HP 14 X 117

PLAN DRIVING OBJECTIVE

ALL PILES SHALL BE DRIVEN TO A DRIVING RESISTANCE OF 284 TONS AFTER A MINIMUM TIP ELEVATION OF 777 IS ACHIEVED.

SUBSTRUCTURE QUANTITIES

ITEM	BENT 16
CU YD CLASS "AA" CONCRETE	123.8
LB BAR REINFORCEMENT STEEL	41277

RELEASED FOR CONSTRUCTION
MARCH 15, 2012

BRIDGE NO. 4

GEORGIA
DEPARTMENT OF TRANSPORTATION
ENGINEERING DIVISION-OFFICE OF BRIDGES AND STRUCTURES

INTERMEDIATE BENT 16
SR 400 SOUTHBOUND TO I-85 NORTHBOUND FLYOVER
SR 400/I-85 CONNECTOR RAMPS
FULTON COUNTY NH000-0085-02(153)

NOT TO SCALE MARCH 2012

DESIGNED BCB/GBL CHECKED MS/KAK REVIEWED
DRAWN DB/BCB DESIGN GROUP APPROVED

DATE | REVISIONS | BY

DRAWING NO. 35.4 -37

BRIDGE SHEET 37 OF 50

J:2011026/BRIDGE/BRIDGE4/4-37_IBT.DGN