RELEASED FOR CONSTRUCTION MARCH 15, 2012

STATE	PROJECT NUMBER	SHEET NO.	TOTAL SHEETS
GA.	NH000-0085-02(153)	391	623

BENT	BACK SPAN EL. A	EL. B	EL. C	EL. D	AHEAD SPAN EL. F	EL. G	EL. H	EL. J	EL. K	EL. L	EL. M	EL. NL	EL. NR	EL. PL	EL. PR	EL. Q	STA.	AA	AB	AC	AD	BA	BB	BC	BD	CA	CB	R	T	U	V	W	X	Y	Z	PILE LAYOUT	MIN. TIP EL.	BENT
5	885.86	886.39	886.93	887.46	885.95	886.34	886.74	887.14	887.54	882.06	883.76	879.35	879.36	879.72	879.74	845.50	115+76.55	2'-2⅝"	6'-7 11/16"	2'-2⅝"	1⅛"	2'-2⅞"	8'-10⅛"	2'-2¾"	0 13/16"	86°-21'-24"	87°-23'-52"	6	3'-6"	2'-4½"	2'-3"	8'-6"	5'-6"	11'-9"	8'-9"	5	824	5
10	910.48	911.02	911.55	912.08	910.32	910.72	911.12	911.52	911.91	906.44	908.13	903.72	903.74	904.10	904.12	847.00	122+72.55	2'-2⅝"	6'-7 11/16"	2'-2⅝"	1⅛"	2'-2¾"	8'-10 3/16"	2'-2 11/16"	1"	86°-21'-24"	86°-44'-29"	9	5'-0"	1'-9"	3'-4½"	10'-9"	7'-9"	10'-6"	7'-6"	6	805	10
15	882.93	883.46	883.99	884.52	882.43	882.83	883.23	883.63	884.03	878.53	880.23	875.81	875.83	876.19	876.21	804.00	129+74.05	2'-2¾"	6'-7⅝"	2'-2¾"	1⅛"	2'-3⅛"	8'-10 1/16"	2'-2 11/16"	0¾"	86°-30'-03"	87°-41'-27"	6	6'-0"	4'-0"	3'-9"	11'-6"	8'-6"	15'-0"	12'-0"	6	789	15

NOTES:
1. MAINTAIN 2" CL. ON ALL REINFORCEMENT UNLESS OTHERWISE NOTED.
2. ⊛ ANGLE IS MEASURED FROM TANGENT ON ℄ SR 400 TO I-85 RAMP AT ℄ BENT.
3. ✱ AT CONTRACTOR'S OPTION CONSTRUCTION JOINT MAY BE RELOCATED TO TOP OF FOOTING.

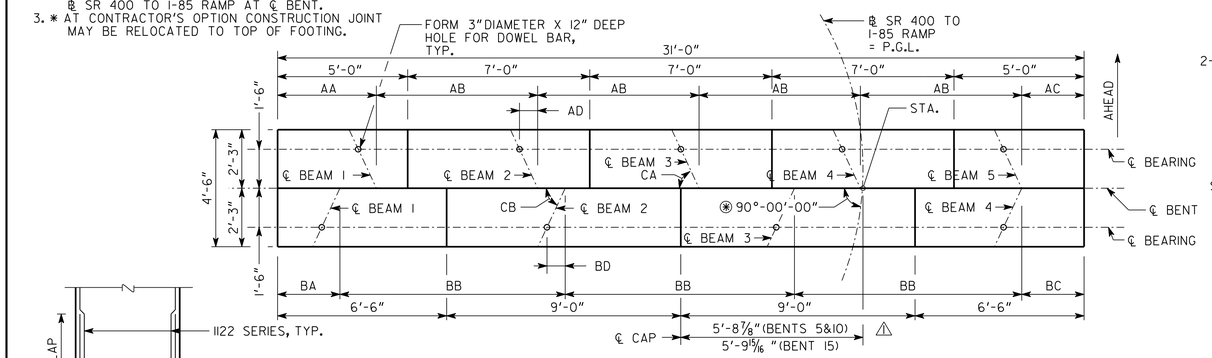

PLAN

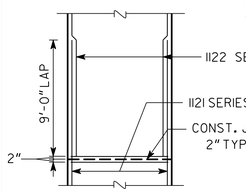

COLUMN CONSTRUCTION JOINT DETAIL
NO SCALE

PROVIDE CONSTRUCTION JOINTS AT THE FOLLOWING LOCATIONS:

BENT	ELEV.
10	882.00
15	840.00

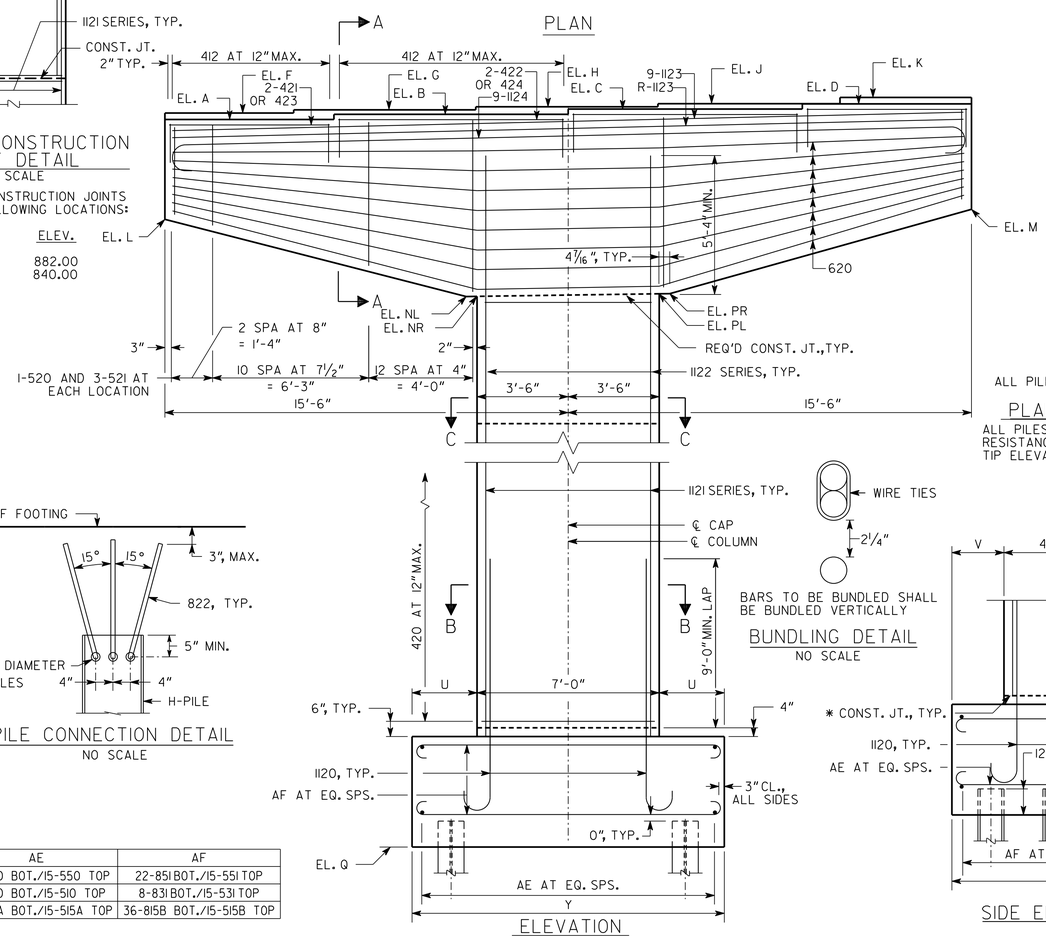

ELEVATION
(LOOKING AHEAD)

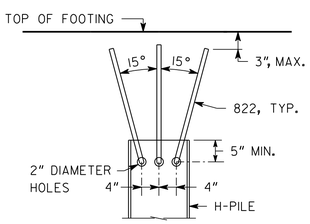

PILE CONNECTION DETAIL
NO SCALE

BENT	AE	AF
5	22-850 BOT./15-550 TOP	22-851 BOT./15-551 TOP
10	28-810 BOT./15-510 TOP	8-831 BOT./15-531 TOP
15	26-815A BOT./15-515A TOP	36-815B BOT./15-515B TOP

BARS TO BE BUNDLED SHALL BE BUNDLED VERTICALLY

BUNDLING DETAIL
NO SCALE

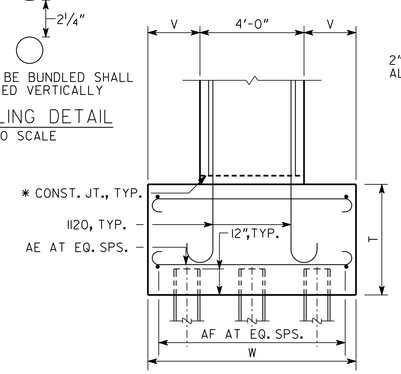

SIDE ELEVATION

ALL PILES SHALL BE STEEL H, HP 14 X 117

PLAN DRIVING OBJECTIVE

ALL PILES SHALL BE DRIVEN TO A DRIVING RESISTANCE OF 284 TONS AFTER A MINIMUM TIP ELEVATION OF (SEE TABLE) IS ACHIEVED.

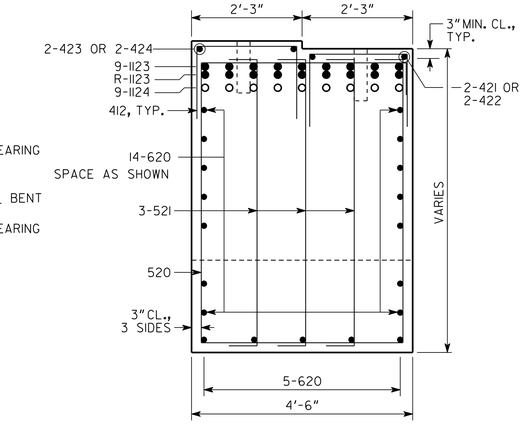

SECTION A-A
NO SCALE

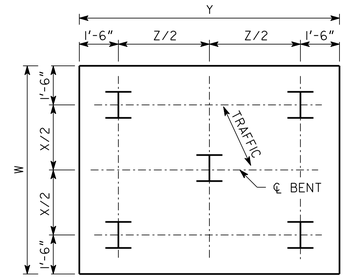

PILE LAYOUT 5
NO SCALE

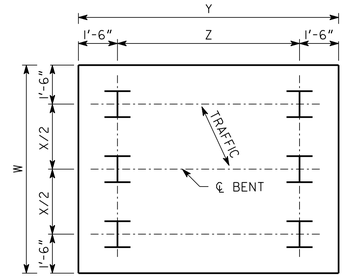

PILE LAYOUT 6
NO SCALE

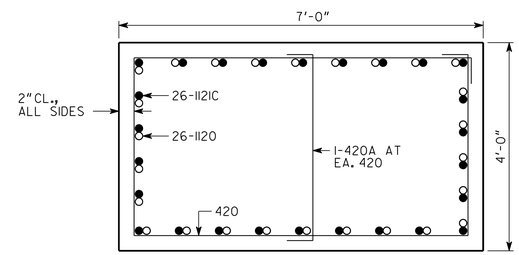

SECTION B-B
BENT 5
NO SCALE

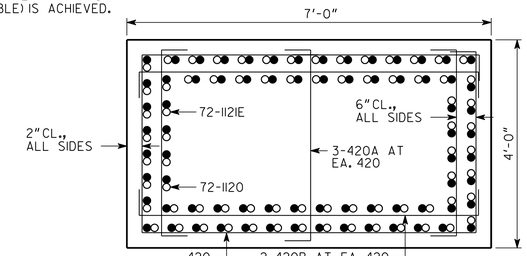

SECTION B-B
BENT 15
NO SCALE

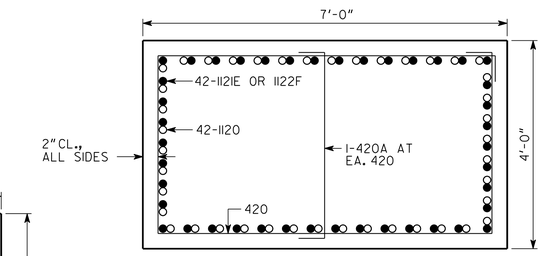

SECTION B-B
BENT 10
NO SCALE

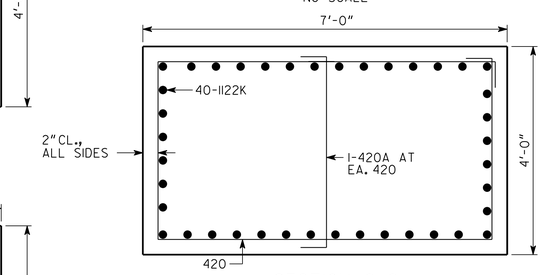

SECTION C-C
BENT 15
NO SCALE

SUBSTRUCTURE QUANTITIES

ITEM	BENT 5	BENT 10	BENT 15
CU YD CLASS "AA" CONCRETE	75.2	105.4	138.8
LB BAR REINFORCEMENT STEEL	16788	28921	43463

REVISIONS	BY	DATE
DIMENSIONS	BKA	5-15-2012
BENT 10 BACK	BKA	10-18-2012

BRIDGE NO. 4

GEORGIA
DEPARTMENT OF TRANSPORTATION
ENGINEERING DIVISION-OFFICE OF BRIDGES AND STRUCTURES

INTERMEDIATE BENTS 5, 10 & 15
SR 400 SOUTHBOUND TO I-85 NORTHBOUND FLYOVER
SR 400/I-85 CONNECTOR RAMPS
FULTON COUNTY NH000-0085-02(153)

NOT TO SCALE MARCH 2012

DRAWING NO. 35.4 -33
BRIDGE SHEET 33 OF 50

DESIGNED BCB/GBL CHECKED MS/KAK REVIEWED
DRAWN DB/BCB DESIGN GROUP APPROVED

J:2011026/BRIDGE/BRIDGE4/4-33_IBT 4X5-BEAM.DGN