STATE	PROJECT NUMBER	SHEET NO.	TOTAL SHEETS
GA.	NH000-0085-02(153)	388	623

VOID

LOCATION	BEARING PADS								BEVELED SHIM PLATES	
						DESIGN LOADS (KIPS)				
	W	L	T	NUMBER OF INTERNAL PLATE(S)	MAXIMUM DESIGN SHEAR DEFLECTION	DEAD LOAD	LIVE LOAD (NO IMPACT)	DEAD LOAD + LIVE LOAD	T_1	T_2
1 AH	22	13	3 1/4	5	0.42	192	61	253	1/2"	3/4"
2 BK	22	13	3 1/4	5	0.00	181	61	242	1/2"	3/4"
2 AH	22	11	3	4	0.00	143	57	200	1/2"	3/4"
3 BK	22	11	3	4	0.33	143	57	200	1/2"	3/4"
3 AH	22	11	3	4	0.33	143	57	200	3/8"	7/8"
4 BK	22	11	3	4	0.00	143	57	200	3/8"	7/8"
4 AH	22	11	3	4	0.00	143	57	200	3/8"	7/8"
5 BK	22	11	3	4	0.33	143	57	200	3/8"	7/8"
5 AH	22	13	3 1/4	5	0.46	169	58	227	1/4"	1"
6 BK	22	13	3 1/4	5	0.00	169	58	227	1/4"	1"
6 AH	22	13	3 1/4	5	0.00	174	59	233	1/4"	1"
7 BK	22	13	3 1/4	5	0.40	174	59	233	1/4"	1"
7 AH	22	13	3 1/4	5	0.40	174	59	233	3/8"	7/8"
8 BK	22	13	3 1/4	5	0.00	174	59	233	3/8"	7/8"
8 AH	22	11	3	4	0.00	143	57	200	1/2"	3/4"
9 BK	22	11	3	4	0.33	143	57	200	1/2"	3/4"
9 AH	22	13	3 1/4	5	0.42	181	61	242	1/2"	3/4"
10 BK	22	13	3 1/4	5	0.00	181	61	242	1/2"	3/4"
10 AH	22	13	3 1/4	5	0.00	169	58	227	5/8"	5/8"
11 BK	22	13	3 1/4	5	0.46	169	58	227	5/8"	5/8"
11 AH	22	13	3 1/4	5	0.46	169	58	227	7/8"	3/8"
12 BK	22	13	3 1/4	5	0.00	169	58	227	7/8"	3/8"
12 AH	22	13	3 1/4	5	0.00	174	59	233	1"	1/4"
13 BK	22	13	3 1/4	5	0.40	174	59	233	1"	1/4"
13 AH	22	13	3 1/4	5	0.40	174	59	233	1"	1/4"
14 BK	22	13	3 1/4	5	0.00	174	59	233	1"	1/4"
14 AH	22	11	3	4	0.00	126	57	183	1"	1/4"
15 BK	22	11	3	4	0.30	126	57	183	1"	1/4"
15 AH	22	11	3	4	0.45	162	49	211	1"	1/4"
16 BK	22	11	3	4	0.00	162	49	211	1"	1/4"
16 AH	22	11	3	4	0.00	162	49	211	1"	1/4"
17 BK	22	11	3	4	0.45	162	49	211	1"	1/4"
17 AH	22	13	3 1/4	5	0.40	170	57	227	7/8"	3/8"
18 BK	22	13	3 1/4	5	0.00	170	57	227	7/8"	3/8"
18 AH	22	13	3 1/4	5	0.00	170	57	227	3/4"	1/2"
19 BK	22	13	3 1/4	5	0.40	170	57	227	3/4"	1/2"
19 AH	22	13	3 1/4	5	0.40	170	57	227	3/4"	1/2"
20 BK	22	13	3 1/4	5	0.00	170	57	227	3/4"	1/2"
20 AH	22	13	3 1/4	5	0.00	170	57	227	3/4"	1/2"
21 BK	22	13	3 1/4	5	0.40	170	57	227	3/4"	1/2"

ALL DIMENSIONS ARE IN INCHES, UNLESS NOTED OTHERWISE

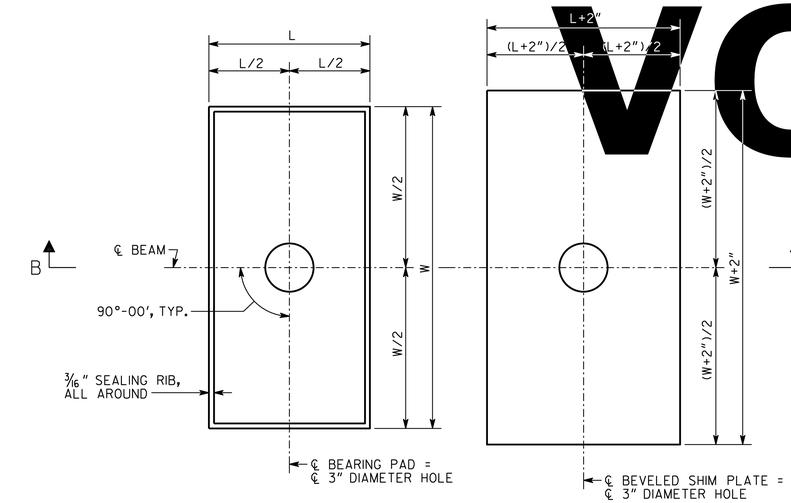

PLAN

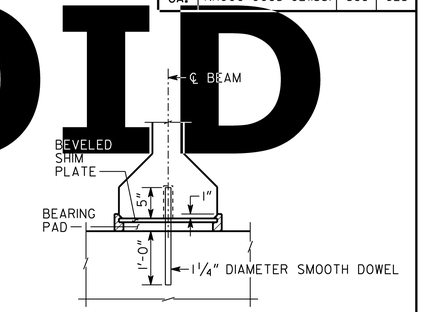

PREFORMED FOAM JOINT FILLER SHALL BE IN ACCORDANCE WITH SUB-SECTION 833.2.10 OF THE GEORGIA DOT SPECIFICATIONS.

ENDWALL NOT SHOWN

SECTION A-A

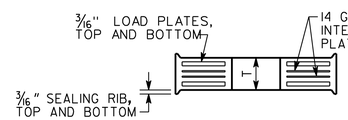

BEARING PAD

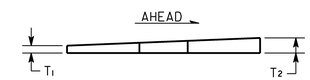

SECTION B-B

BEVELED SHIM PLATE

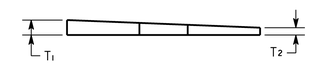

BEVELED SHIM PLATE

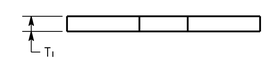

SHIM PLATE

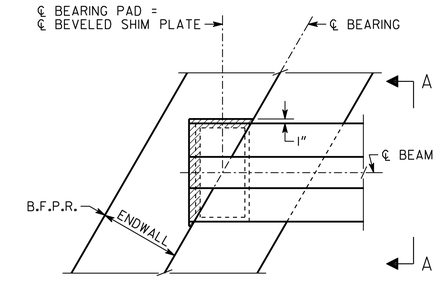

PLAN
BENT 1 SHOWN

NOTES

1) BEARING PADS HAVE BEEN DESIGNED ACCORDING TO AASHTO SPECIFICATIONS DIVISION I, SECTION 14.6.6 AND SHALL BE FURNISHED IN ACCORDANCE WITH AASHTO SPECIFICATIONS DIVISION II, SECTION 18, BEARINGS.

2) 1 1/4" DIAMETER SMOOTH DOWELS SHALL BE ASTM A 709 GRADE 36.

3) BEARING PADS SHALL BE MADE OF 60 DUROMETER HARDNESS NEOPRENE, GRADE 2 OR HIGHER.

4) 3" DIAMETER HOLE IN BEARING PADS MAY BE FORMED OR DRILLED.

5) BEARING PADS SHALL HAVE 1/4" COVER ON THE TOP, BOTTOM, AND SIDES AND AROUND THE HOLE.

6) 3/16" LOAD PLATES AND 14 GAGE INTERNAL PLATE(S) (IF REQUIRED) SHALL BE ASTM A 709 GRADE 36 OR ASTM A 1011 GRADE 36.

7) NUMBER OF INTERNAL PLATES SHOWN FOR ILLUSTRATION PURPOSES ONLY. THE NUMBER OF INTERNAL PLATE(S) SPECIFIED SHALL BE EQUALLY SPACED BETWEEN LOAD PLATES.

8) USE OF 1 1/2° MOLD DRAFT IS OPTIONAL.

9) BEVELED SHIM PLATES SHALL BE ASTM A 709 GRADE 36 AND SHALL BE GALVANIZED IN ACCORDANCE WITH ASTM A 123.

10) EACH BEVELED SHIM PLATE SHALL BE MARKED WITH THE BENT, LOCATION, BEAM AND UPSTATION DIRECTION.

RELEASED FOR CONSTRUCTION
MARCH 15, 2012

BRIDGE NO. 4

GEORGIA
DEPARTMENT OF TRANSPORTATION
ENGINEERING DIVISION-OFFICE OF BRIDGES AND STRUCTURES

BEARING PAD DETAILS
SR 400 SOUTHBOUND TO I-85 NORTHBOUND FLYOVER
SR 400/I-85 CONNECTOR RAMPS
FULTON COUNTY NH000-0085-02(153)

SCALE: NO SCALE MARCH 2012

DRAWING NO. 35.4 - 30
BRIDGE SHEET 30 OF 50

BY	REVISIONS	DATE

DESIGNED BCB/GBL CHECKED MS/KAK REVIEWED
DRAWN DB/BCB DESIGN GROUP APPROVED

J:/2011026/BRIDGE/BRIDGE4/4-30_BEARINGS.DGN