STATE	PROJECT NUMBER	SHEET NO.	TOTAL SHEETS
GA.	NH000-0085-02(153)	306	480

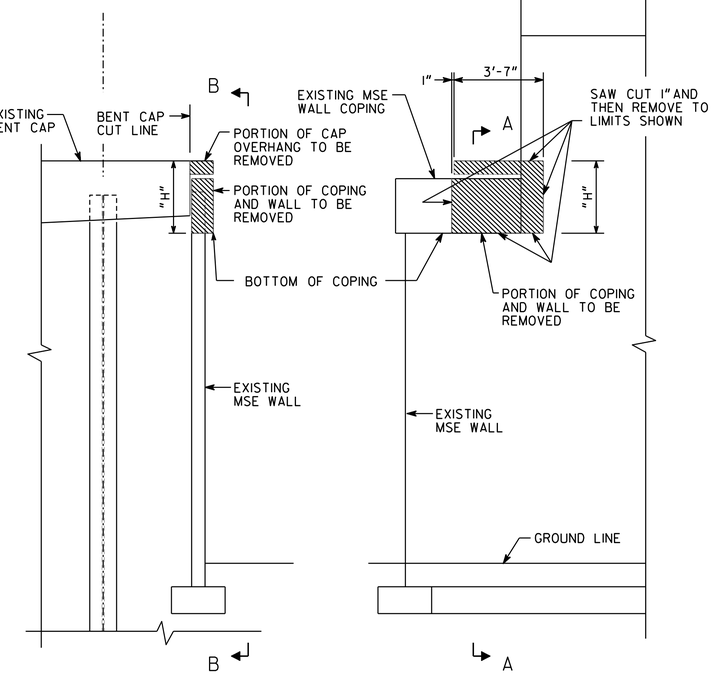

SECTION A-A

BENT 27 LOOKING UPSTATION AT EXISTING STRUCTURE

SECTION B-B

BENT 27 LOOKING AT RIGHT SIDE OF EXISTING STRUCTURE

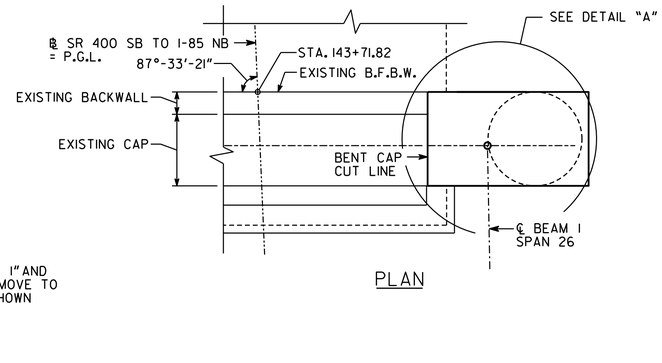

PLAN

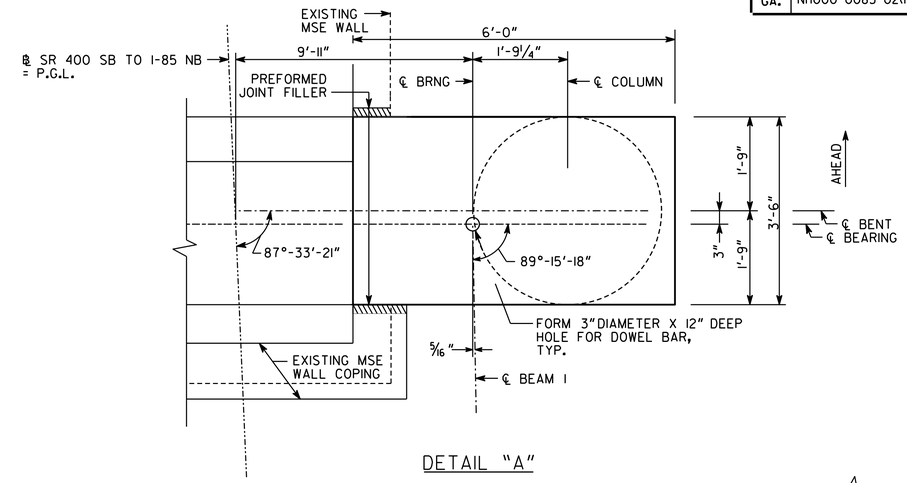

DETAIL "A"

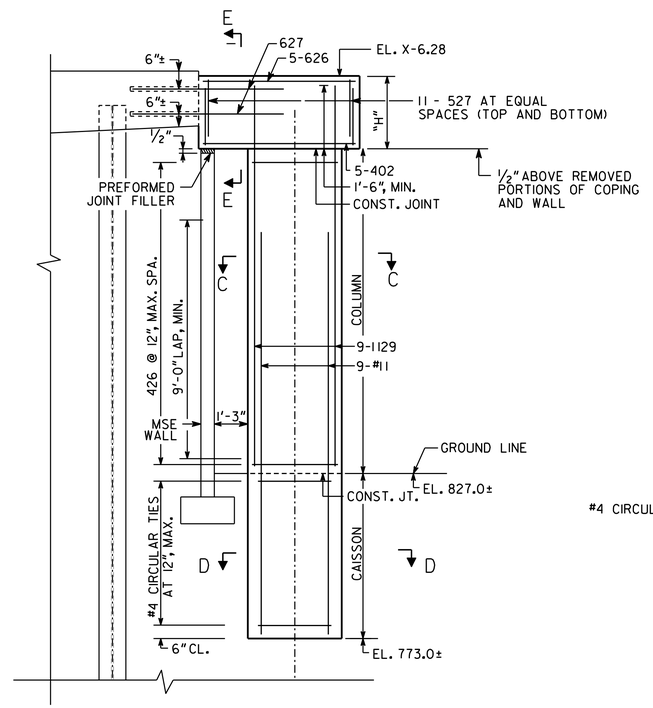

ELEVATION

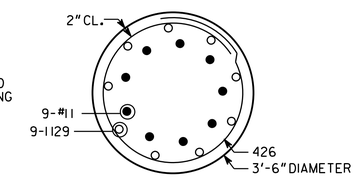

SECTION C-C

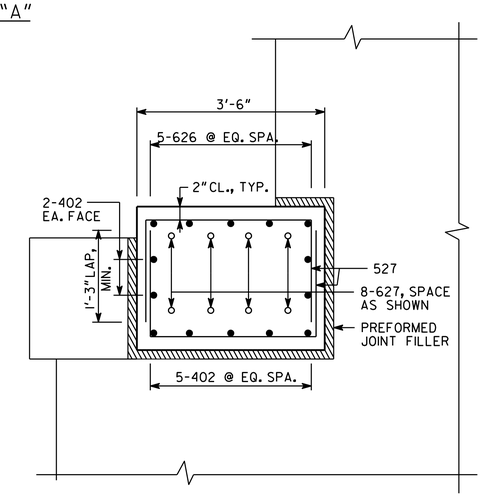

SECTION E-E

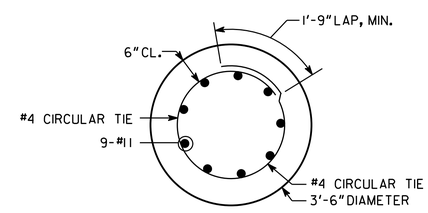

SECTION D-D

NOTES:

1. COPING UNDER CAP OVERHANG AND CAP OVERHANG ABOVE COPING SHALL BE SAW CUT AND REMOVED AS SHOWN IN SECTIONS A-A AND B-B.
2. 627 BARS SHALL BE ADHESIVELY ANCHORED 30" INTO EXISTING CAP USING HILTIHIT RE-500 IN ACCORDANCE WITH THE MANUFACTURER'S RECOMMENDATIONS.
3. MINIMUM REINFORCEMENT CLEARANCE SHALL BE 2", UNLESS NOTED OTHERWISE.
4. "H" SHALL BE THE DISTANCE BETWEEN THE BOTTOM OF THE COPING TO BE REMOVED AND THE TOP OF THE EXISTING CAP.
5. CAISSON CAPACITY SHALL BE 110 TONS.
6. AT CONTRACTORS OPTION, THE CAISSON 9-#11 BARS MAY REPLACE THE 9-1129 AND EXTEND INTO THE CAP W/O A LAP. CAISSON TIES WILL BE USED FROM CAISSON TIP TO BOTTOM OF CAP AT 12" MAX. SPACING.

SUBSTRUCTURE QUANTITIES

ITEM	BENT 27
CU YD CLASS "AA" CONCRETE	6.3
LB BAR REINFORCEMENT STEEL	1130

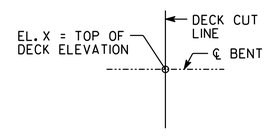

ELEVATION "X"

AS-BUILT

DRAWING NO. 35.5 -24

BRIDGE SHEET 24 OF 29

BRIDGE NO. 5

GEORGIA
DEPARTMENT OF TRANSPORTATION
ENGINEERING DIVISION-OFFICE OF BRIDGES AND STRUCTURES

END BENT 27
SR 400 TO I-85 RAMP
SR 400/I-85 CONNECTOR RAMPS OVER LENOX ROAD AND NORTH FORK PEACHTREE CREEK
FULTON COUNTY NH000-0085-02(153)

SCALE: NO SCALE MARCH 2012

DESIGNED JMO / GBL CHECKED KAK / MS REVIEWED
DRAWN GBL DESIGN GROUP APPROVED

REVISIONS BY DATE

1 INCH WHEN PRINTED FULL SIZE

J:/2011026/BRIDGE/BRIDGE 5/5-24 EBT27.DGN