STATE	PROJECT NUMBER	SHEET NO.	TOTAL SHEETS
GA.	NH000-0085-02(153)	304	623

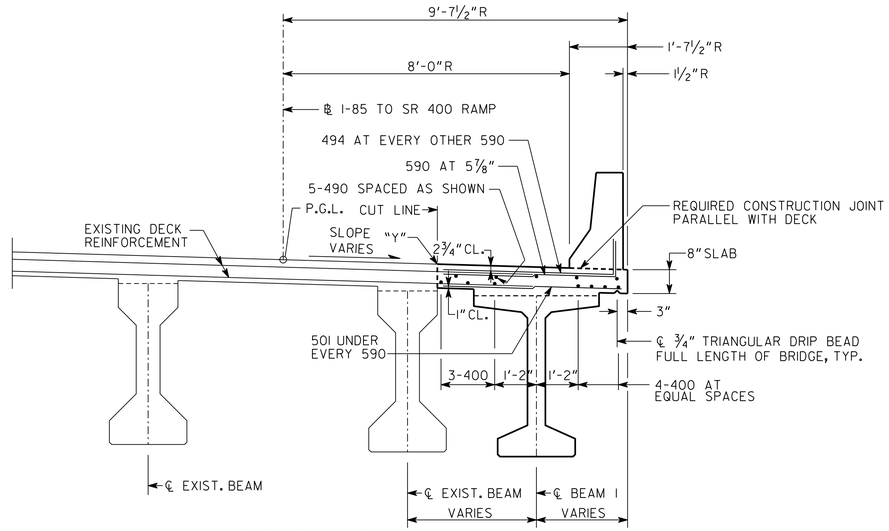

SECTION THRU SLAB

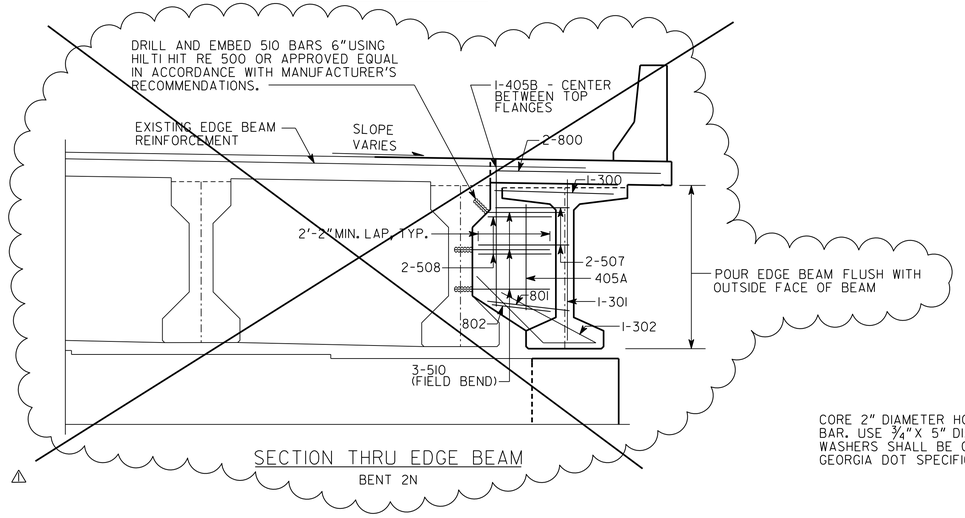

SECTION THRU EDGE BEAM

BENT 2N

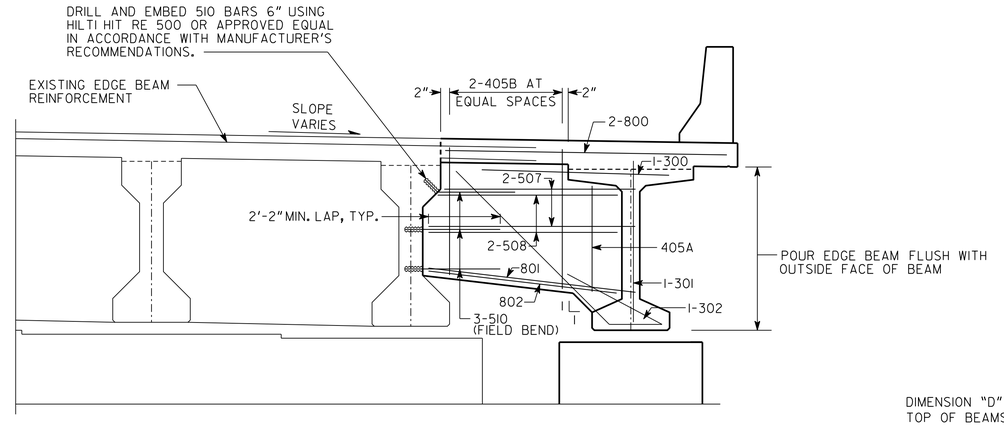

SECTION THRU EDGE BEAM

BENT 3N

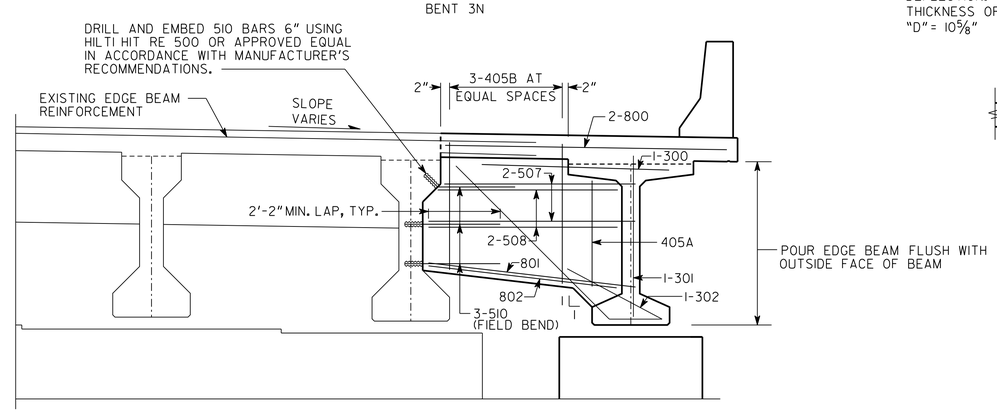

SECTION THRU EDGE BEAM

BENT 4N

DIMENSION "D" IS MEASURED FROM TOP OF SLAB TO TOP OF BEAMS AT CENTERLINE BEARING. VARY "D" BETWEEN BEARINGS TO COMPENSATE FOR DEAD LOAD DEFLECTION. MAINTAIN A CONSTANT SLAB THICKNESS OF 8".
"D" = 10⅝"

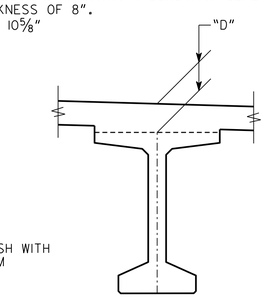

"D" DIMENSION

CORE 2" DIAMETER HOLE IN EXISTING BEAM FOR 1" DIAMETER PLAIN BAR. USE ¾" X 5" DIAMETER WASHER THIS END. BAR, NUTS AND WASHERS SHALL BE GALVANIZED PER SUB-SECTION 865.2.01.B.12 OF THE GEORGIA DOT SPECIFICATIONS. SEE BEAM PLANS FOR REMAINING DETAILS.

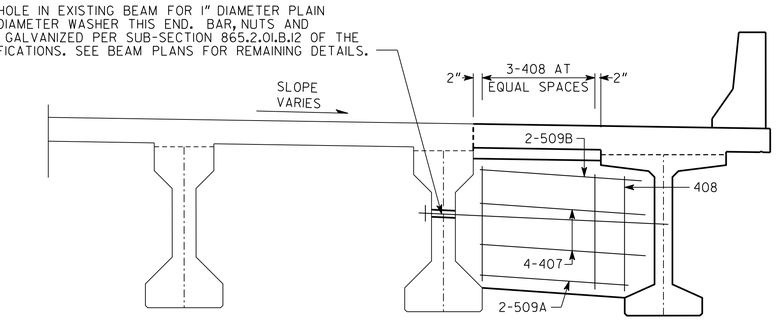

SECTION AT DIAPHRAGM

SEE BRIDGE SHEET 15A FOR NEW DOWEL PIN LOCATION AND REMEDIAL EDGE BEAM DETAILS.

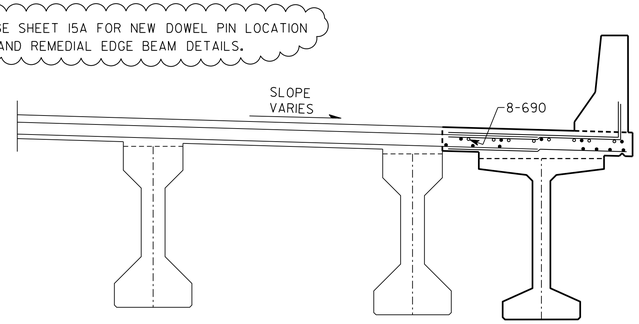

SECTION THRU SLAB AT INTERMEDIATE BENT 3N

NOTES:
1. CUT LINE SHALL BE VERTICAL SAW CUT 1" DEEP.
2. R DENOTES RADIAL DIMENSION.
3. LAP 501, 590 AND 800 BARS 2'-6" MINIMUM WITH EXISTING REINFORCEMENT.
4. "Y" IS ELEVATION AT TOP OF EXISTING EDGE OF DECK AT CUT LINE TO BE DETERMINED BY THE CONTRACTOR AT EVERY ℄ BENT AND B.F.P.R. THESE ELEVATIONS SHALL BE USED TO DETERMINE THE REQUIRED BENT ELEVATIONS.
5. MAINTAIN 2" CL. ON ALL REINFORCEMENT UNLESS OTHERWISE NOTED.
6. MATCH EXISTING SLOPE FOR THE WIDENED SECTION.

RELEASED FOR CONSTRUCTION
MARCH 15, 2012

BRIDGE NO. 1

GEORGIA
DEPARTMENT OF TRANSPORTATION
ENGINEERING DIVISION-OFFICE OF BRIDGES AND STRUCTURES

DECK SECTION - SPANS 2N - 3N
I-85 SOUTHBOUND TO SR 400 NORTHBOUND
SR 400/I-85 CONNECTOR RAMPS OVER LENOX ROAD AND NORTH FORK PEACHTREE CREEK
FULTON COUNTY
NH000-0085-02(153)

SCALE: ½" = 1'-0"
FEBRUARY 2012

REVISIONS	BY	DATE
BT 2N REV. EDGE BM	BCB	2-14-13

DRAWING NO. 35.1 - 6
BRIDGE SHEET 6 OF 20

DESIGNED BKA
DRAWN BRW
CHECKED GBL
DESIGN GROUP
REVIEWED
APPROVED

J:2011026/BRIDGE/BRIDGE1/1-6_DS SPANS 2N-3N.DGN

1 INCH WHEN PRINTED FULL SIZE