STATE	PROJECT NUMBER	SHEET NO.	TOTAL SHEETS
GA.	NH000-0085-02(153)	301	480

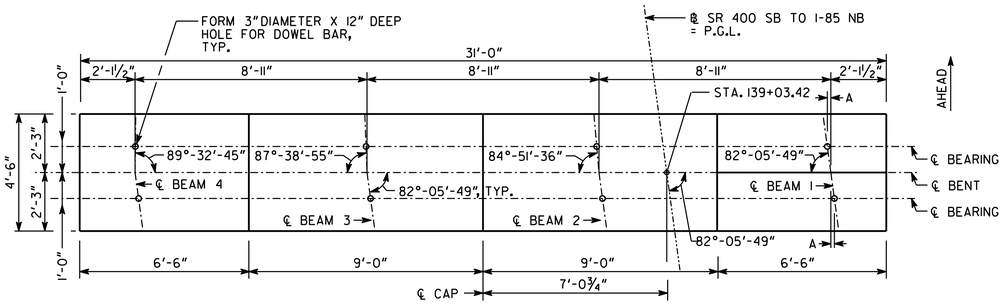

PLAN

BEAM	A
1 BK.	1⅝"
1 AH.	1⅝"
2 BK.	1⅝"
2 AH.	1 1/16"
3 BK.	1⅝"
3 AH.	7/16"
4 BK.	1⅝"
4 AH.	⅛"

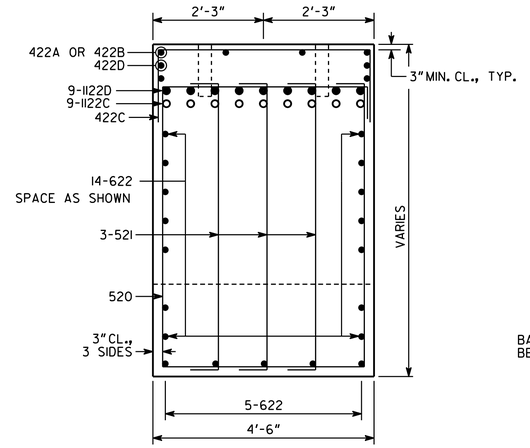

SECTION A-A

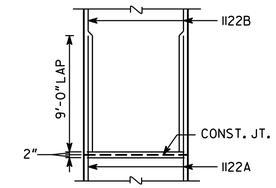

COLUMN CONSTRUCTION JOINT DETAIL

PROVIDE CONSTRUCTION JOINTS AT THE FOLLOWING LOCATIONS:

ELEV.

830.75

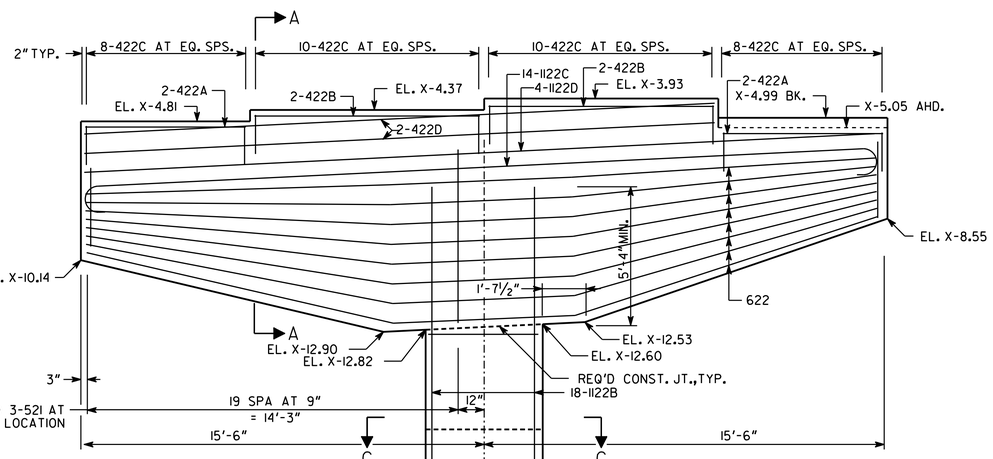

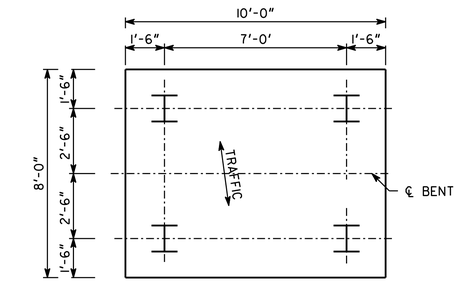

PILE LAYOUT

BARS TO BE BUNDLED SHALL BE BUNDLED VERTICALLY

BUNDLING DETAIL

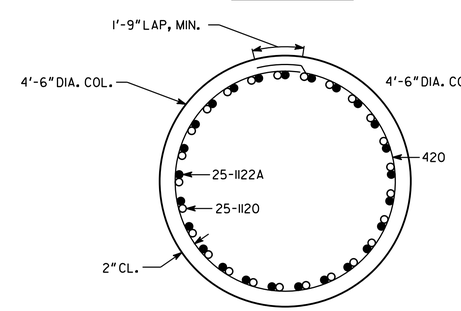

SECTION B-B

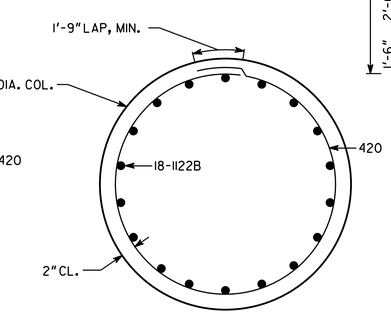

SECTION C-C

NOTES:
1. MAINTAIN 2" CL. ON ALL REINFORCEMENT UNLESS OTHERWISE NOTED.
2. * AT CONTRACTOR'S OPTION CONSTRUCTION JOINT MAY BE RELOCATED TO TOP OF FOOTING.
3. "X" IS THE ELEVATION TO BE DETERMINED BY THE CONTRACTOR AT THE TOP OF THE EXISTING DECK AT THE INTERSECTION OF THE CUT LINE AND THE ℄ BENT. THIS ELEVATION SHALL BE USED TO DETERMINE THE REQUIRED BENT ELEVATIONS.

ALL PILES SHALL BE STEEL H, HP 14 X 117

PLAN DRIVING OBJECTIVE

ALL PILES SHALL BE DRIVEN TO A DRIVING RESISTANCE OF 284 TONS AFTER A MINIMUM TIP ELEVATION OF 785 IS ACHIEVED.

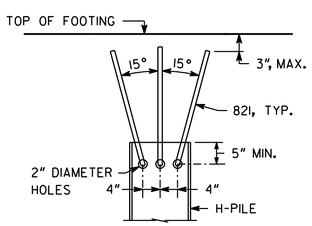

PILE CONNECTION DETAIL

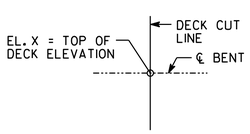

ELEVATION "X"

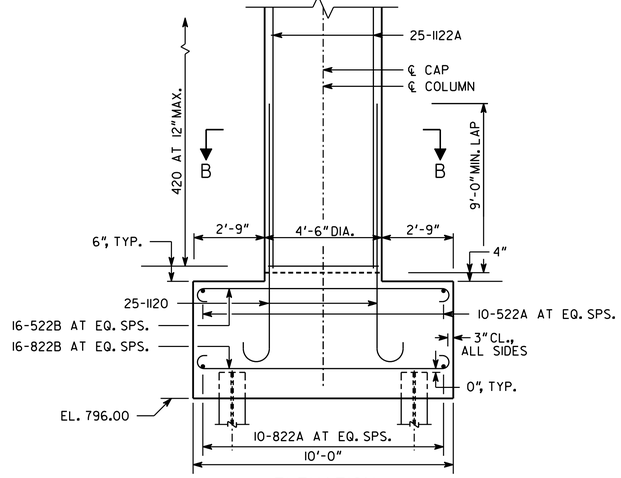

ELEVATION
(LOOKING AHEAD)

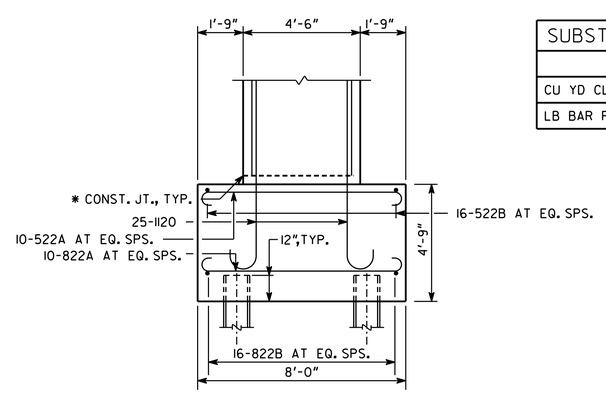

SIDE ELEVATION

SUBSTRUCTURE QUANTITIES	
ITEM	BENT 22
CU YD CLASS "AA" CONCRETE	75.6
LB BAR REINFORCEMENT STEEL	16519

BRIDGE NO. 5

GEORGIA
DEPARTMENT OF TRANSPORTATION
ENGINEERING DIVISION-OFFICE OF BRIDGES AND STRUCTURES

INTERMEDIATE BENT 22
SR 400 TO I-85 RAMP
SR 400/I-85 CONNECTOR RAMPS OVER LENOX ROAD AND NORTH FORK PEACHTREE CREEK
FULTON COUNTY
NH000-0085-02(153)

AS-BUILT

DATE	REVISIONS	BY

DRAWING NO. 35.5 - 19	NO SCALE	MARCH 2012
BRIDGE SHEET 19 OF 29	DESIGNED JMO / GBL	CHECKED KAK / MS
	DRAWN PAR	DESIGN GROUP
	REVIEWED	APPROVED

1 INCH WHEN PRINTED FULL SIZE

J:/2011026/BRIDGE/BRIDGE 5/5-19_IBT22.DGN