| STATE | PROJECT NUMBER | SHEET NO. | TOTAL SHEETS |
|---|---|---|---|
| GA. | NH000-0085-02(153) | 292 | 623 |

RELEASED FOR CONSTRUCTION
MARCH 15, 2012

VOID

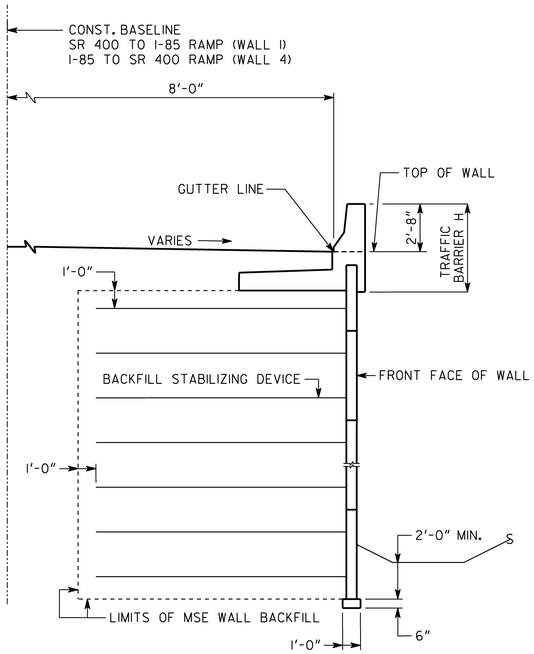


SECTION A-A

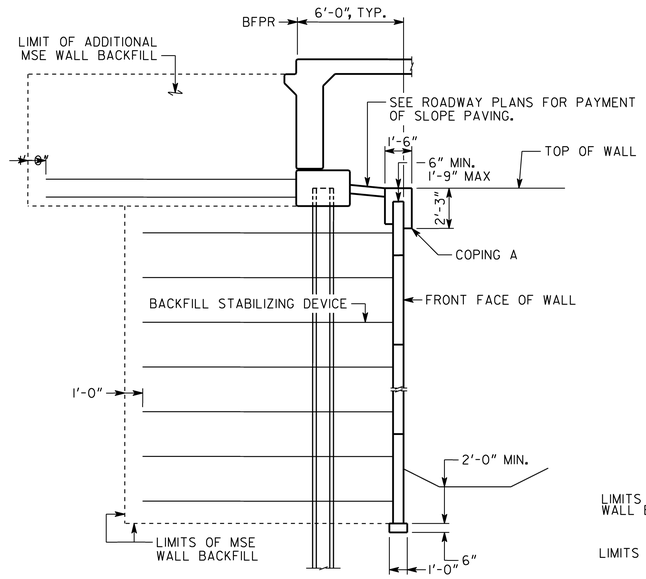


SECTION C-C

CHEEK WALLS NOT SHOWN
SEE BRIDGE PLANS FOR
CHEEK WALL DETAILS

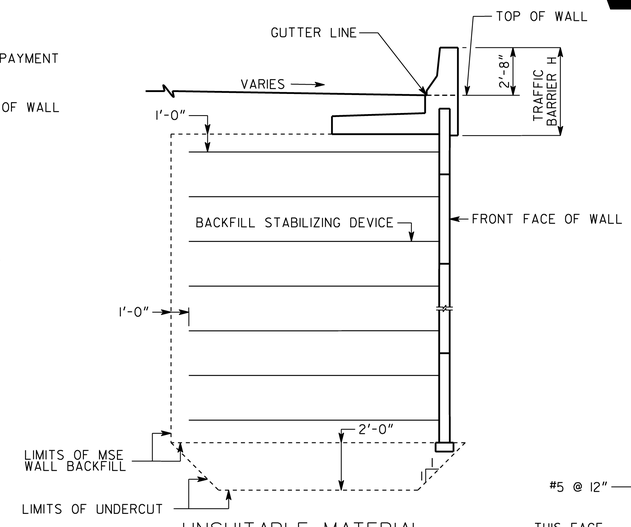


UNSUITABLE MATERIAL
LIMITS OF UNDERCUT

WALL 1:
108+00 TO 110+00 AND 111+00 TO 112+00
THE EXACT LIMITS OF UNDERCUTTING AND BACKFILLING WILL BE AT THE DIRECTION OF THE ENGINEER AT THE TIME OF CONSTRUCTION.

WALLS 3 & 4:
IF QUESTIONABLE BEARING MATERIALS ARE ENCOUNTERED AT THE BASE OF THE WALL ENVELOPES ISOLATED UDERCUTTING MAY BE REQUIRED. THE GEOTECHNICAL BUREAU SHOULD BE CONSULTED PRIOR TO PERFORMING ANY UNDERCUTTING TO CONFIRM NECESSITY, AS WELL AS DETERMINE THE DEPTH AND EXTENT.

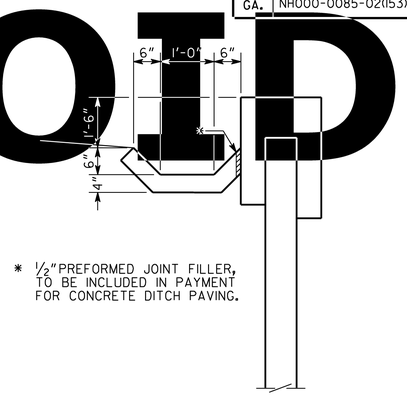


* ½" PREFORMED JOINT FILLER, TO BE INCLUDED IN PAYMENT FOR CONCRETE DITCH PAVING.

PAVED DITCH DETAIL

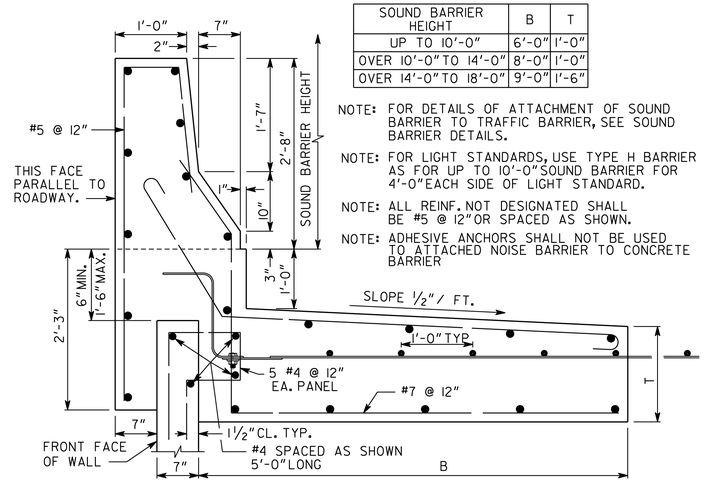


| SOUND BARRIER HEIGHT | B | T |
|---|---|---|
| UP TO 10'-0" | 6'-0" | 1'-0" |
| OVER 10'-0" TO 14'-0" | 8'-0" | 1'-0" |
| OVER 14'-0" TO 18'-0" | 9'-0" | 1'-6" |

NOTE: FOR DETAILS OF ATTACHMENT OF SOUND BARRIER TO TRAFFIC BARRIER, SEE SOUND BARRIER DETAILS.

NOTE: FOR LIGHT STANDARDS, USE TYPE H BARRIER AS FOR UP TO 10'-0" SOUND BARRIER FOR 4'-0" EACH SIDE OF LIGHT STANDARD.

NOTE: ALL REINF. NOT DESIGNATED SHALL BE #5 @ 12" OR SPACED AS SHOWN.

NOTE: ADHESIVE ANCHORS SHALL NOT BE USED TO ATTACHED NOISE BARRIER TO CONCRETE BARRIER

C.I.P. TRAFFIC BARRIER, TYPE H

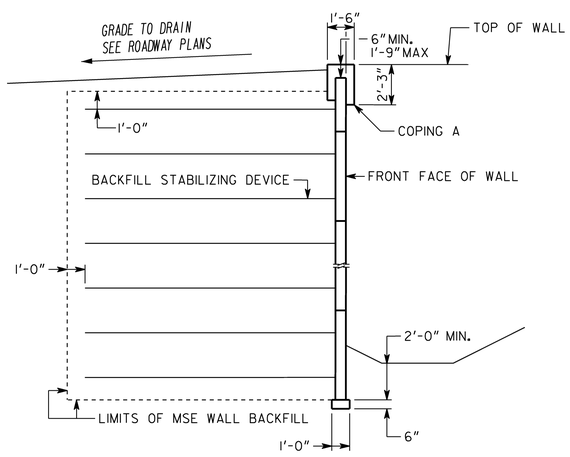


SECTION B-B

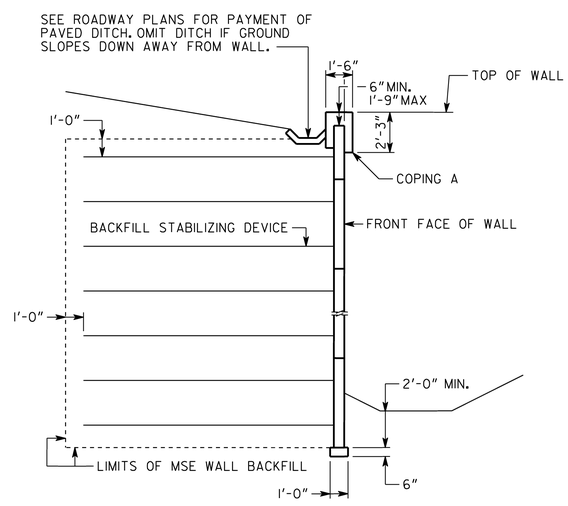


SECTION D-D

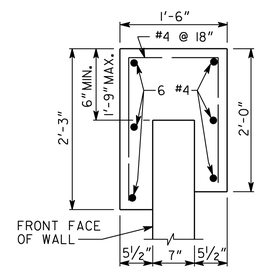


C.I.P. COPING, A

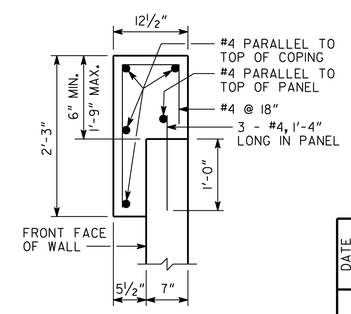


ALTERNATE C.I.P. COPING, A

PROJECT P.I. NO. 762380
WALLS 1, 3, & 4

GEORGIA
DEPARTMENT OF TRANSPORTATION
ENGINEERING DIVISION-OFFICE OF BRIDGES AND STRUCTURES

WALL DETAILS
SR 400/I-85 CONNECTOR RAMPS OVER LENOX ROAD AND NORTH FORK PEACHTREE CREEK
FULTON COUNTY NH000-0085-02(153)

SCALE: NONE SEPTEMBER 2011

| REVISIONS | BY | DATE |
|---|---|---|
| UNDERCUT DETAIL ADDED | PPR | 3-15-2012 |

DRAWING NO. 32 - 07
WALL SHEET 7 OF 8

DESIGNED WWD CHECKED REVIEWED
DRAWN DESIGN GROUP APPROVED

J:2011026\BRIDGE\BRIDGE1\