STATE	PROJECT NUMBER	SHEET NO.	TOTAL SHEETS
GA.	NH000-0085-02(153)	287	480

DIMENSION "D" IS MEASURED FROM TOP OF SLAB TO TOP OF BEAMS AT CENTERLINE BEARING. VARY "D" BETWEEN BEARINGS TO COMPENSATE FOR DEAD LOAD DEFLECTION AND VERTICAL CURVE. MAINTAIN A CONSTANT SLAB THICKNESS OF 8¼".

"D" = 11¼" FOR BEAM 1

"D" = 10¾" FOR BEAMS 2 THRU 4

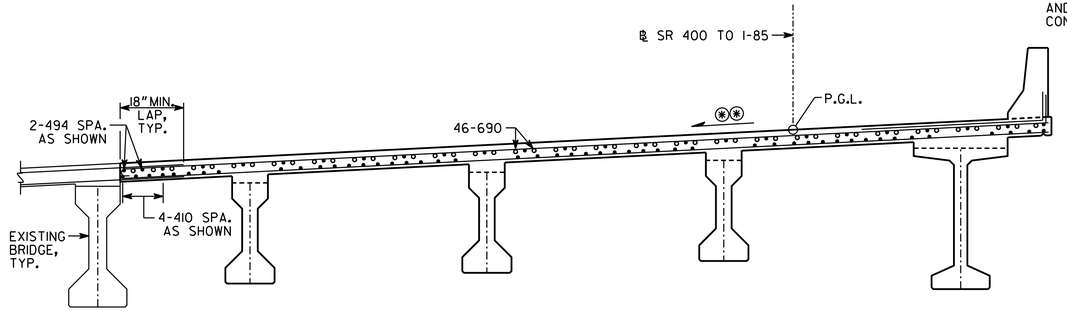

SECTION THRU SLAB
AT INTERMEDIATE BENT 22

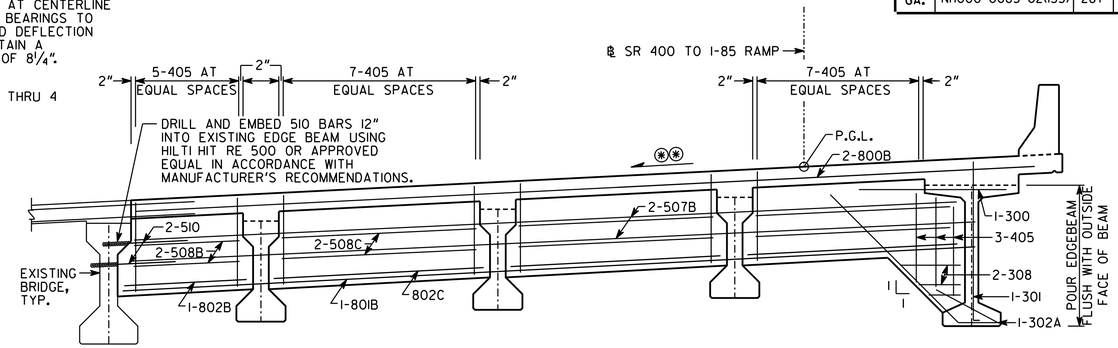

SECTION THRU EDGE BEAM

BENT 22

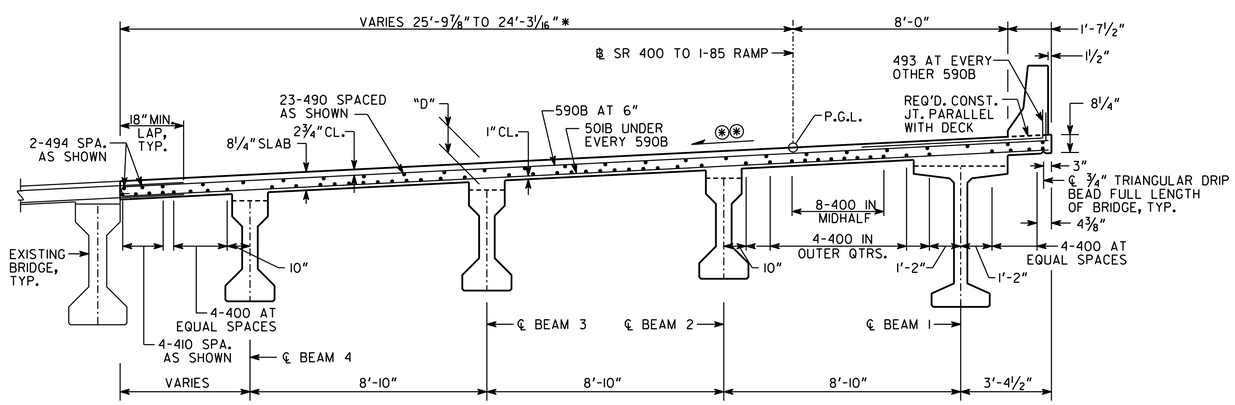

SECTION THRU SLAB
FROM STATION 138+90.63 TO BENT 22

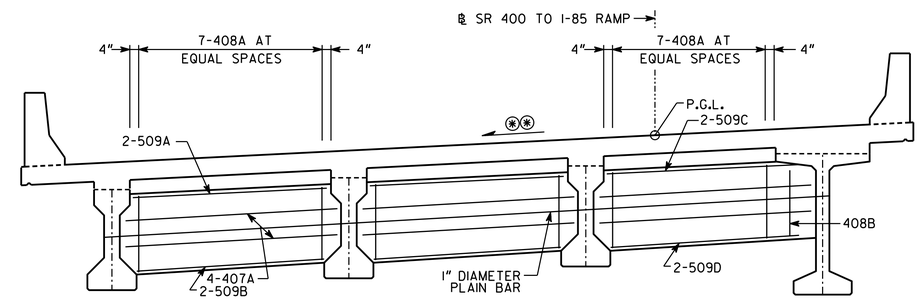

SECTION THRU DIAPHRAGM

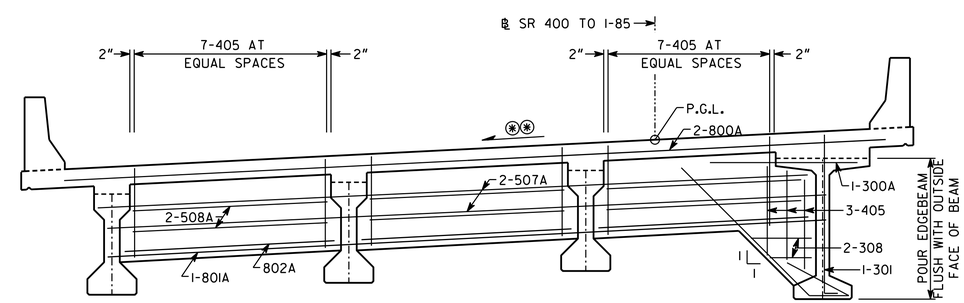

SECTION THRU EDGE BEAM

BENT 21

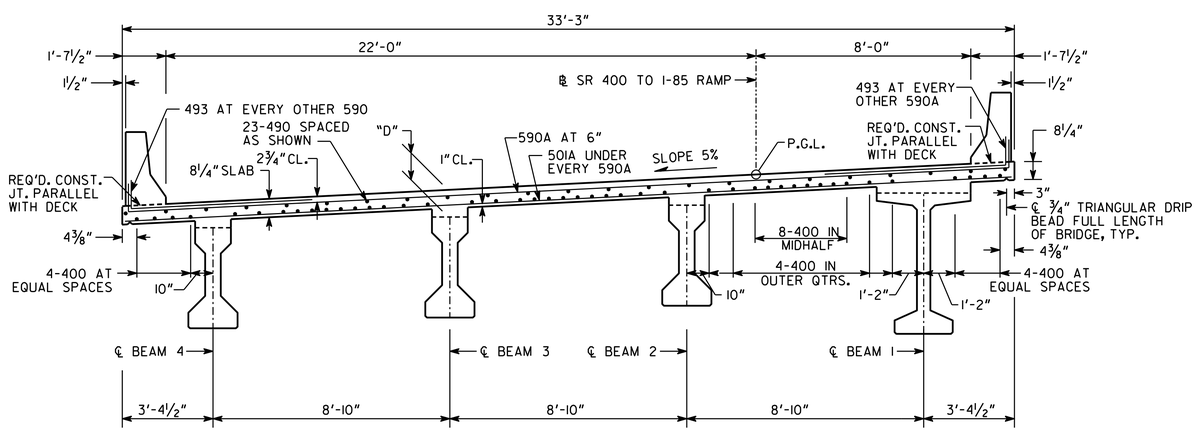

SECTION THRU SLAB
FROM BENT 21 TO STATION 138+90.63

* DIMENSION IS PERPENDICULAR TO ℄ SR 400 TO I-85 AT MAXIMUM OR MINIMUM WIDTH WITHIN SPAN.

⊛⊛ MATCH EXISTING SLOPE IN ADJACENT LANE.

AS-BUILT

DRAWING NO. 35.5 - 5

BRIDGE SHEET 5 OF 29

BRIDGE NO. 5

GEORGIA
DEPARTMENT OF TRANSPORTATION
ENGINEERING DIVISION-OFFICE OF BRIDGES AND STRUCTURES

DATE | REVISIONS | BY

DECK SECTION SPAN 21
SR 400 TO I-85 RAMP
SR 400/I-85 CONNECTOR RAMPS OVER LENOX ROAD AND NORTH FORK PEACHTREE CREEK
FULTON COUNTY — NH000-0085-02(153)

SCALE: ⅜" = 1'-0" — MARCH 2012

DESIGNED JMO / GBL — CHECKED KAK / MS — REVIEWED
DRAWN DB — DESIGN GROUP — APPROVED

1 INCH WHEN PRINTED FULL SIZE

J:/2011026/BRIDGE/BRIDGE 5/5-5_DS 21.DGN