VOID

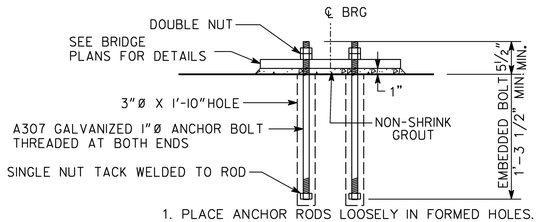

1. PLACE ANCHOR RODS LOOSELY IN FORMED HOLES.
2. SET BRIDGE.
3. GROUT ANCHOR RODS IN PLACE USING NON-SHRINK GROUT.
4. SEE CONTECH BRIDGE PLANS FOR ANCHOR BOLT LOCATIONS RELATIVE TO ℄ OF BEARING.

ANCHOR BOLT DETAIL

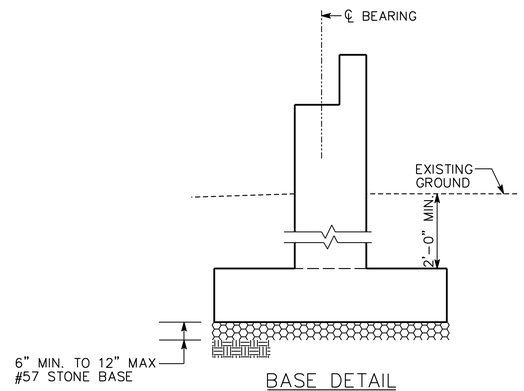

BASE DETAIL

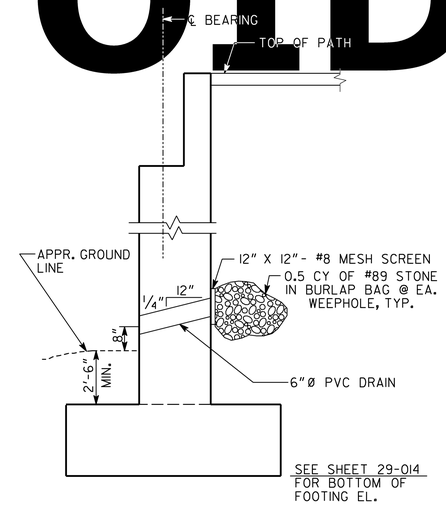

WEEP HOLE DETAIL

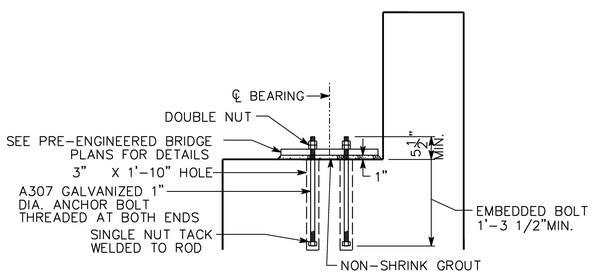

BEARING DETAIL

NOT TO SCALE

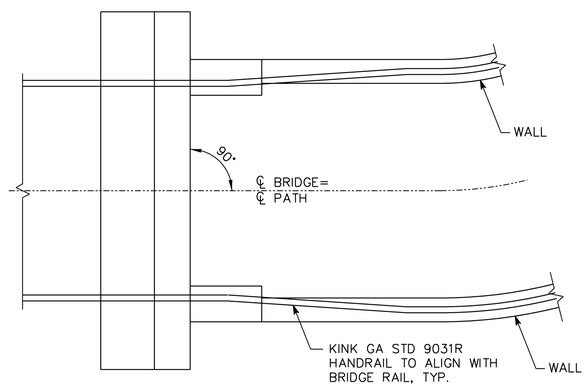

RAIL CONNECTION DETAIL

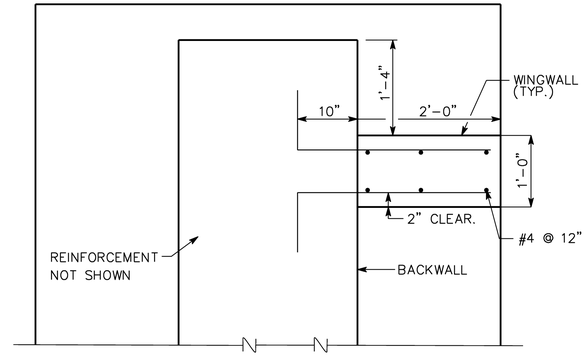

SECTION B-B

SCALE: 1" = 1'-0"

RELEASED FOR CONSTRUCTION
FEBRUARY 28, 2012

Archer Western Contractors

Heath & Lineback Engineers INCORPORATED
2390 CANTON ROAD, BUILDING 200
MARIETTA, GEORGIA 30066-5393
(770)424-1668

SCALE IN FEET
0 2 4 8

SCALE: 1/2" = 1'-0"

REVISION DATES

STATE OF GEORGIA
DEPARTMENT OF TRANSPORTATION
OFFICE: Innovative Program Delivery

PEDESTRIAN BRIDGE 2
ABUTMENT DETAILS
S.R. 400/ I-85
CONNECTOR RAMPS

DRAWING No. 29-034

3/1/2007 GPLN